AS/400

Backup and Recovery – Basic

Technical Newsletter

Base Publication Number: SC41-3304-01
Part Number: 87G3114
File Number: None
Date: 10 March 1995
Previous Newsletters: None.

This Technical Newsletter provides replacement pages and additional information for the subject manual and applies to Version 3 Release 1 Modification 0. The replacement pages and additional information remain in effect for subsequent editions unless specifically altered. Pages to be inserted or replaced are:

iii to viii
5-13 to 5-18 (replaces 5-13 to 5-16)
9-27 to 9-44 (replaces 9-27 to 9-38)
10-13, 10-14
11-11 to 11-16
15-5 to 15-26
X-1 to X-26

If you are inserting pages from different Newsletters and identical numbers are involved, always use the page with the latest date (shown in the change-page notice at the top of the page). The page with the latest date contains the most complete information.

A change to the text is indicated by a vertical line to the left of the change. Absence of a vertical line means that previously existing text has been moved or rearranged.

Summary of Amendments

The primary purpose for the changes in this Technical Newsletter is to provide instructions for the following:

- Saving all user data for the purpose of restoring to a system running a different release.
- Restoring information to a new system that is running a later release of the operating system.
- Restoring information during an MES upgrade to the processor when the MES requires that disk units be replaced.

Note: Please file this cover letter at the back of the manual to provide a record of changes.

Comments on this Technical Newsletter can be addressed to:

Attn Department 245
IBM Corporation
3605 Highway 52 N
Rochester, MN 55901-7899 USA

or you can fax your comments to:

United States and Canada: 800+937-3430
Other countries: (+1)+507+253-5192

SN41-3381-00 © Copyright IBM Corp. 1995.
All rights reserved.
Note to US Government Users – Documentation related to restricted rights – Use, duplication or disclosure is subject to restrictions set forth in GSA ADP Schedule Contract with IBM Corp.

Contents

Notices ix
Trademarks and Service Marks ix

About Backup and Recovery – Basic, SC41-3304 . . xi

Summary of Changes xiii
Backup and Recovery Enhancements That Are Described in This Book xiii
Other Backup and Recovery Enhancements xiv
Other Changes to This Book xv

Designing Backup, Recovery, and Availability

Chapter 1. Options for Backup, Recovery, and Availability–Overview 1-1
Save and Restore Operations–Overview 1-1
Tape Units–Overview 1-1
Automated Tape Library Systems –Overview 1-1
Journal Management–Overview 1-1
Access-Path Protection–Overview 1-2
Commitment Control–Overview 1-2
Auxiliary Storage Pools–Overview 1-2
Checksum Protection–Overview 1-3
Mirrored Protection–Overview 1-3
Device Parity Protection–Overview 1-3
Comparison of Disk Protection Options 1-4
Uninterruptible Power Supply–Overview 1-4
Battery Power Feature–Overview 1-4
Dual Systems–Overview 1-4
Backup Recovery and Media Services/400–Overview . 1-5
ADSTAR Distributed Storage Manager/400–Overview . 1-5
Report Data Archive and Retrieval System/400–Overview 1-5
QUSRTOOL Library–Overview 1-5
Work with Auxiliary Storage Pools–Overview 1-5
Business Recovery Services–Overview 1-5
Availability Support Center–Overview 1-6
Recovery Readiness Examination–Overview 1-6
Data Migration Service Offerings–Overview 1-6

Chapter 2. Planning Strategies for Saving and Availability 2-1
Why Do You Need a Save Strategy? 2-1
What Are the Common Failure Types? 2-1
Disk Failure 2-1
System Failure 2-2
Power Failure 2-2
Program Failure or Human Error 2-2
Complete System Loss 2-2
What Do You Need to Save and How Often? 2-2
Simple Save Strategy 2-3
Medium Save Strategy 2-3
Complex Save Strategy 2-5
Testing Your Strategy for Saving and Recovering . . . 2-5
Availability Options 2-5
Benefits, Costs, and Limitations of Availability Options 2-6

Saving Information on Your System

Chapter 3. Save Procedure–General Information . 3-1
What the Save Commands and Menu Options Do . . 3-1
How the System Performs a Save Operation 3-5
How to Use the Pre-Check Option 3-5
How to Choose Your Save Media 3-5
How to Manage Your Tapes 3-6
How to Free Storage When Saving 3-8
How Object Locking Affects Save Operations 3-8
Size Limitations When Saving Objects 3-9
Restrictions When Using Save Files 3-9
Verifying What Is Saved 3-9
How to Determine Objects That Are Saved 3-9
How to Determine Objects That Are Not Saved . 3-10
How to Determine When An Object Was Last Saved 3-10
Recovering from a Media Error During a SAVLIB Operation 3-11
How the System Handles Damaged Objects During a Save Operation 3-11
What Affects the Performance of Save Operations . 3-11
Managing IBM-Supplied Journals 3-12

Chapter 4. The Save Menu 4-1
What the Save Menu Options Do 4-1
Using Save Menu Options 21, 22, and 23 4-2
Task 1–Printing System Documentation and Preparing to Save 4-2
Task 2–Using the Menu Option 4-4

Chapter 5. How to Save Specific Types of Information 5-1
How to Save Libraries 5-1
How to Save Objects 5-2
Ways to Save Multiple Objects 5-2
Objects Whose Contents Are Not Saved 5-2
How to Save Only Changed Objects 5-2
How to Save Changed Objects When You Use Journaling 5-3
How the System Updates Changed Object Information 5-3
How to Save Database Files 5-4
How to Save Access Paths 5-5
Saving a File Network–Example 5-5
How to Save Files with Referential Constraints 5-5
How to Save Journals and Journal Receivers 5-6

© Copyright IBM Corp. 1995

How to Save Save Files 5-6
How to Save Configuration Information 5-6
How to Save Security Information 5-7
How to Save Spooled Files 5-7
How to Save Licensed Programs 5-7
How Documents and Folders Are Stored and Used . . 5-7
How to Save Document Library Objects 5-8
Ways to Save Multiple Documents 5-8
How to Save Changed Document Library Objects . 5-8
Ways to Reduce Disk Space Used by Documents . 5-9
Output from the SAVDLO Command 5-9
How to Save Office Services Information 5-9
How to Save Mail Objects 5-10
Saving Files for Text Search Services 5-10
File Systems–Save Methods Available 5-10
How to Save Objects in Directories 5-10
How to Save Objects That Have More Than One Name 5-11
How to Save Changed Objects in Directories . . . 5-11
How LAN Server/400 Information Is Stored and Saved 5-12
Tips for Saving LAN Server/400 Information . . 5-12
Output from the SAV Command 5-14
Restrictions When Using the SAV Command 5-14
| How to Save All User Data 5-15
| Steps for Saving All User Data 5-16

Chapter 6. Using Operational Assistant to Save Information 6-1
Defining What Should Be Saved 6-1
Defining How Backup Operations Are Run 6-2
How the System Saves Changed Objects Using Operational Assistant Backup 6-3
Defining When Backup Operations Are Run 6-3
Getting Started with Operational Assistant Backup . . 6-4
Summary of Operational Assistant Commands and Menu Options for Backup 6-4

Chapter 7. Saving Storage 7-1
Saving Storage–Planning 7-1
Saving Storage–Purpose 7-1
Saving Storage–Hardware Considerations 7-1
Saving Storage–Operational Considerations . . . 7-1
Saving Storage–Error Recovery 7-2
Saving Storage–Performance Considerations . . . 7-2
Steps for Saving Storage 7-2
Task 1–Starting the Save Storage Procedure . . . 7-2
Task 2–Responding to Messages 7-3
Task 3–Completing the SAVSTG Process 7-5
Procedure for Resuming the Save Storage Operation . 7-6

Recovering Information on Your System

Chapter 8. Restore Procedures–General Information 8-1
The Relationship Between Save and Restore Commands 8-2
What Happens When You Restore Objects 8-2
Sequence for Restoring Related Objects 8-3
Putting Your System in a Restricted State 8-3
Reclaiming Storage 8-3
Controlling Restoration of Security-Sensitive Objects . 8-4
Protecting Job Logs 8-5
Locked Objects While Restoring 8-6
How to Verify That Objects Are Restored Successfully 8-6
Recovery from an Unsuccessful Restore Operation . . 8-7
Recovering from an Error While Restoring Libraries 8-7
Recovering from an Error While Restoring DLOs . . 8-8
Recovering Mail 8-8
Recovering Documents and Folders 8-8
Performing a Normal IPL 8-9

Chapter 9. Selecting the Right Recovery Strategy . 9-1
Some Common Recovery Terminology 9-1
Recovery Procedure for a Power Failure 9-2
Recovery Procedure for a System Failure 9-2
Recovery Procedure for a Program Failure or Human Error 9-2
Choosing the Recovery Procedure for a Disk Failure or Disk Errors 9-2
Actions for Disk Failure–Checklist 1 9-4
Actions for Disk Failure–Checklist 2 9-5
Actions for Disk Failure–Checklist 3 9-7
Actions for Disk Failure–Checklist 4 9-8
Actions for Disk Failure–Checklist 5 9-10
Actions for Disk Failure–Checklist 6 9-12
Actions for Disk Failure–Checklist 7 9-13
Actions for Disk Failure–Checklist 8 9-15
Actions for Disk Failure–Checklist 9 9-16
Actions for Disk Failure–Checklist 10 9-18
Actions for Disk Failure–Checklist 11 9-20
Actions for Disk Failure–Checklist 12 9-21
Actions for Disk Failure–Checklist 13 9-22
Actions for Disk Failure–Checklist 14 9-23
Actions for Disk Failure–Checklist 15 9-24
Actions for Disk Failure–Checklist 16 9-25
Actions for Disk Failure–Checklist 17 9-26
Recovering after a Complete System Loss–Checklist 18 9-27
Restoring Your Information during a System Upgrade–Checklist 19 9-29
| Restoring Your Information to a New System–Checklist
| 19A 9-33
Choosing the Procedure to Recover User Information 9-37
Recovering User Information Using Commands–Checklist 20 9-38
Using Option 21 from the Restore Menu–Checklist 21 9-40
Using Options 22 and 23 from the Restore Menu–Checklist 22 9-41
Recovering User Information Using Tapes from Operational Assistant Backup–Checklist 23 . . . 9-42

Chapter 10. Recovering the Licensed Internal Code 10-1
How to Use Function Code 23 to Restore the Licensed Internal Code 10-1

Task 1–Powering Down the System 10-2
Task 2–Preparing the System to Perform an IPL from Tape 10-3
Task 3–Loading the Licensed Internal Code from Tape 10-4
How to Use Function Code 24 to Install the Licensed Internal Code 10-7
Task 1–Powering Down the System 10-8
Task 2–Preparing the System to Perform an IPL from Tape 10-8
Task 3–Loading the Licensed Internal Code from Tape 10-9
Recovering Your Disk Configuration 10-12
Disabling and Enabling the High-Speed Feature on the 2440 Tape Unit 10-14

Chapter 11. Restoring the Operating System . . 11-1
Choosing the Right Procedure for Restoring the Operating System 11-2
Loading the Operating System Using a Manual IPL . 11-2
Steps for Restoring the OS/400 Licensed Program . 11-3
Task 1–Starting to Restore the Operating System 11-3
Task 2–Selecting the Installation Options 11-6
Task 3–Selecting IPL Options 11-9
Task 4–Setting Major System Options 11-11
Task 5–Defining or Changing the System at IPL . 11-11
Task 6–Completing the IPL 11-13
Recovering from SRC A900 2000 11-15

Chapter 12. Starting the System after It Ends Abnormally 12-1
Task 1–Performing an Attended IPL 12-1
Task 2–Using the Edit Rebuild of Access Paths Display 12-3
Task 3–Using the Edit Check Pending Constraints Display 12-4
Task 4–Recovering from Damaged Objects and Unreadable Sectors 12-6
Recovering a Damaged Journal 12-7
Recovering a Damaged Journal Receiver 12-8
Recovering a Journaled File That Is Damaged or Not Synchronized 12-8
Recovering Other Types of Damaged Objects . . 12-8

Chapter 13. Recovering Information in a User Auxiliary Storage Pool 13-1
Describing the Contents of Your User Auxiliary Storage Pools 13-1
Choosing the Procedure to Recover User ASPs . . . 13-2
Recovering a User ASP After Recovering the System ASP 13-2
Task 1–Reclaiming Storage 13-3
Task 2–Restoring User Profiles 13-4
Task 3–Restoring the Configuration 13-5
Task 4–Recovering Journals and Journal Receivers in the QRCL Library 13-5
Task 5–Restoring Libraries to the System Auxiliary Storage Pool 13-6
Task 6–Restoring Document Library Objects to the System Auxiliary Storage Pool 13-7
Task 7–Reclaiming Document Library Objects . . 13-7
Task 8–Recovering Save Files from the QRCL Library 13-7
Task 9–Associating Journal Receivers with Journals 13-7
Task 10–Restoring Object Ownership 13-9
Recovering An Overflowed User Auxiliary Storage Pool 13-10
Resetting An Overflowed User Auxiliary Storage Pool without an IPL 13-10
Resetting An Overflowed User Auxiliary Storage Pool during an IPL 13-12
Deleting Overflowed Objects during Recovery 13-14
Recovering a Damaged User Auxiliary Storage Pool 13-14
Task 1–Restoring User Profiles 13-15
Task 2–Determining the Contents of the Lost Auxiliary Storage Pool 13-15
Task 3–Determining Tasks to Restore Objects . . 13-16
Task 4–Restoring Libraries to the User Auxiliary Storage Pool 13-16
Task 5–Restoring Documents to the User Auxiliary Storage Pool 13-16
Task 6–Restoring Journals to the User Auxiliary Storage Pool 13-17
Task 7–Restoring Journal Receivers to the Auxiliary Storage Pool 13-18
Task 8–Restore Save Files to the User ASP . . . 13-18
Removing a Failed Disk Unit from the System ASP . 13-19
Task 1. Access Dedicated Service Tools 13-19
Task 2. Delete the Auxiliary Storage Pool Data . 13-21
Task 3. Remove the Disk Unit from the Auxiliary Storage Pool Configuration 13-22
Task 4. Prepare to Install the Licensed Internal Code 13-24

Chapter 14. The Restore Menu 14-1
What the Restore Menu Options Do 14-1
Using Restore Menu Options 21, 22, and 23 14-1

Chapter 15. How to Restore Specific Types of Information 15-1
How to Recover System Information 15-1
Sequence for Restoring Security Information 15-1
How to Restore User Profiles 15-1
What Happens When You Restore User Profiles . 15-2
What You Should Know About Restoring User Profiles 15-2
How the System Establishes Ownership for Restored Objects 15-3
How the System Establishes the Primary Group for Restored Objects 15-3
How to Restore Object Authorities 15-4
What the System Does When You Restore Authority 15-4
How to Restore Configuration Objects 15-5
Correcting Problems with the System Resource Management Database 15-5
Recovering Devices That Will Not Vary On 15-6
Recovering When You Change the Console Type 15-7
Recovering the System/36 Environment Configuration 15-7
How to Restore Libraries 15-8
How to Restore Objects 15-9

How to Restore Database Files 15-9
Comparing File Attributes during a Restore Operation 15-10
How the System Matches File Members during a Restore Operation 15-11
How to Restore Members to a File 15-11
Restrictions on the File Member Parameter . . 15-11
How to Restore Logical Files 15-12
How the System Restores Access Paths 15-12
Restoring a File Network–Examples 15-13
How to Prevent the System from Rebuilding a Large Access Path 15-13
How the System Restores Files with Shared Formats 15-14
How the System Restores Files with Referential Constraints 15-14
Referential Constraint Network–Example . . . 15-14
How the System Restores Files with Triggers . . 15-15
How to Restore Files That Are Journaled 15-15
What Happens When You Restore Journaled Files to a Different Library 15-16
Steps before Deleting a Physical File 15-16
How to Restore Journals and Journal Receivers . . 15-16
How to Restore Journals 15-16
Steps before Deleting a Journal 15-17
How to Restore Journal Receivers 15-17
Resolving Name Conflicts When Restoring Journal Receivers 15-17
Correcting the Journal Receiver Directory . . . 15-18
Steps before Deleting a Journal Receiver 15-18
How the System Restores Programs 15-18
How to Restore Save File Data 15-19
How to Restore Spooled Output Files 15-19
How to Restore Licensed Programs 15-19
How to Restore Documents and Folders 15-19
How to Restore Folders 15-20
How to Rename Documents When Restoring . . 15-20
How to Restore Mail and Distribution Objects . . 15-21
How the System Restores Descriptive Information for DLOs 15-21
How the System Restores Authority and Ownership for DLOs 15-21
When to Run the Rename Directory (RNMDIRE) Command 15-21
When to Run the Document Library Object (RNMDLO) Command 15-22
Output from the RSTDLO Command 15-22
Recovery of Text Index Files for Text Search Services 15-22
How to Restore Objects in Directories 15-23
How to Restore LAN Server/400 Information 15-24
Restrictions When Using the Restore Command . . 15-24
Restoring Program Temporary Fixes 15-25

Chapter 16. Restoring Changed Objects and Applying Journaled Changes 16-1
Task 1–Restoring Changed Objects 16-1
Restoring Changed Objects by Library 16-2
Restoring Changed Objects Individually 16-2
Task 2–Determining Whether You Need to Apply Journaled Changes 16-3
Task 3–Determining What Journal Receivers to Use 16-3
Task 4–Applying Journaled Changes for User Journals 16-5
Task 5–Applying Journaled Changes for the QAOSDIAJRN Journal 16-6
Task 6–Restoring Changed Documents and Folders 16-7
Task 7–Restoring Changed Objects in Directories . . 16-8

Chapter 17. How to Restore Your System Using Operational Assistant Tapes 17-1
How to Restore Your Libraries 17-2
How to Restore Libraries That You Saved by Using a Backup List 17-3
How to Restore Changed Objects That You Saved by Using a Operational Assistant 17-3

Chapter 18. Restoring the System from the Save Storage Media 18-1
Task 1–Powering Down the System and Loading the Licensed Internal Code 18-1
Task 2–Restoring the Remaining Save Storage Tapes 18-1
Task 3–Restoring Additional Information 18-6
Task 4–Restoring Program Temporary Fixes (PTFs) 18-6
Resuming the Restore Storage Operation 18-6

Supplemental Information

Appendix A. Licensed Internal Code SRCs That Require User Input (A6xx xxxx) A-1
Displaying Information about the Load Source Unit . . A-1
Problems with the Load Source Unit A-2
Function 11 System Reference Codes and Possible Responses A-3

Appendix B. Example Disaster Recovery Plan . . . B-1
Section 1. Major Goals of a Disaster Recovery Plan–Example B-1
Section 2. Personnel–Example B-1
Organization Chart B-2
Section 3. Application Profile–Example B-2
Section 4. Inventory Profile–Example B-2
Section 5. Information Services Backup Procedures . . B-3
Section 6. Disaster Recovery Procedures B-3
Disaster Action Checklist B-4
Recovery Start-Up Procedures for Use after Actual Disaster B-4
Section 7. Recovery Plan–Mobile Site B-5
Mobile Site Setup Plan B-6
Communication Disaster Plan B-6
Electrical Service B-6
Section 8. Recovery Plan–Hot Site B-6
Hot-Site System Configuration B-7
Section 9. Restoring the Entire System B-7
Section 10. Rebuilding Process B-7
Section 11. Testing the Disaster Recovery Plan B-8

Section 12. Disaster Site Rebuilding B-9
Vendors B-9
Floor Plan B-9
Section 12. Record of Plan Changes B-9

Appendix C. How to Save Object Types–Summary C-1

Appendix D. Procedures for Recovering the Text Index D-1

Bibliography H-1

Index X-1

Figures

2-1. Sample Time Line for Recovery 2-1
3-1. File Systems–Save Commands 3-1
3-2. Save Commands and Menu Options 3-1
3-3. How the System Performs Save Processing 3-5
4-1. Save Menu–First Display 4-1
5-1. Saving Access Paths 5-5
5-2. How Office Services Objects Are Saved . . 5-9
5-3. Integrated File System and Save Commands 5-10
5-4. An Object with Hard Links–Example 5-11
5-5. An Object with a Symbolic Link–Example . 5-11
5-6. View of the /QLANSrv Directory 5-12
6-1. Operational Assistant Save Options 6-1
6-2. Change Monthly Backup Options Display . . 6-4
8-1. Restore Procedures 8-1
8-2. Save Procedures and Restore Procedures for File Systems 8-2
13-1. User ASP Configuration Before Failure . . 13-1
13-2. User ASP Configuration After Restoring Operating System 13-3
13-3. User ASP Configuration After Reclaiming Storage 13-4
13-4. User ASP Configuration After Recovering Isolated Journal Receiver 13-6
14-1. Restore Menu–First Display 14-1
15-1. Example of a Database File with Two Members 15-9
15-2. Restoring a Copy of a File 15-10
15-3. Restoring Database Files with Different Creation Dates 15-10
15-4. Restoring Database Files with Different Creation Dates 15-11
15-5. Restoring Access Paths 15-13
15-6. Restoring a Referential Constraint Network 15-14
15-7. Restoring a Journaled File to a Different Library 15-16
15-8. An Object with Hard Links–Example 15-23
15-9. An Object with a Symbolic–Example . . . 15-23
16-1. Sample Recovery Time Line 16-1
16-2. Receiver Directory–Saving Attached Receivers 16-4
16-3. Receiver Directory–Saving Detached Receivers 16-4
17-1. How the System Is Saved with Operational Assistant Backup 17-1

Tables

1-1. Comparison of Disk Protection Options . . . 1-4
2-1. Overview of Parts of the System 2-2
2-2. Benefits, Costs, and Limitations of Availability Functions 2-6
2-3. Comparison of Availability and Recovery Options 2-7
2-4. Summary of Availability Options by Failure Type–Recovery Time 2-9
2-5. Summary of Availability Options by Failure Type–Frequency 2-9
3-1. Options for Saving Parts of the System . . . 3-2
3-2. Media Used with the Save Commands . . . 3-6
3-3. Tape Naming for Simple Save Strategy . . . 3-6
3-4. Tape Naming for Medium Save Strategy . . 3-6
3-5. Object Types That Support Freeing Storage 3-8
3-6. Lock Type Needed for Save Operation . . . 3-8
3-7. Size Limitations for Save Files 3-9
3-8. Data Areas That Contain Save History . . 3-10
3-9. IBM-Supplied Journals 3-12
5-1. Comparison of Special Values for SAVLIB Command–LIB Parameter 5-1
5-2. Object Types Whose Contents Are Not Saved 5-2
5-3. SAVCHGOBJ Command–Cumulative 5-3
5-4. SAVCHGOBJ Command–Not Cumulative . . 5-3
5-5. Saving Database Files 5-4
5-6. Saving a File Network 5-5
5-7. Procedures for Saving and Restoring the Entire System 5-15
6-1. Summary of Operational Assistant Backup Options 6-4
7-1. Handling SAVSTG Messages 7-4
8-1. Relationship Between Save and Restore Commands 8-2
8-2. Restoring Existing Objects 8-2
8-3. Lock Type Needed for Restore Operation . . 8-6

9-1. Choosing the Correct Recovery Procedure for Disk Media Failure 9-3
9-2. Recovery Checklist for Disk Failure–Checklist 1 9-4
9-3. Recovery Checklist for Disk Failure–Checklist 2 9-5
9-4. Recovery Checklist for Disk Failure–Checklist 3 9-7
9-5. Recovery Checklist for Disk Failure–Checklist 4 9-8
9-6. Recovery Checklist for Disk Failure–Checklist 5 9-10
9-7. Recovery Checklist for Disk Failure–Checklist 6 9-12
9-8. Recovery Checklist for Disk Failure–Checklist 7 9-13
9-9. Recovery Checklist for Disk Failure–Checklist 8 9-15
9-10. Recovery Checklist for Disk Failure–Checklist 9 9-16
9-11. Recovery Checklist for Disk Failure–Checklist 10 9-18
9-12. Recovery Checklist for Disk Failure–Checklist 11 9-20
9-13. Recovery Checklist for Disk Failure–Checklist 12 9-21
9-14. Recovery Checklist for Disk Failure–Checklist 13 9-22
9-15. Recovery Checklist for Disk Failure–Checklist 14 9-23
9-16. Recovery Checklist for Disk Failure–Checklist 15 9-24
9-17. Recovery Checklist for Disk Failure–Checklist 16 9-25
9-18. Recovery Checklist for Disk Failure–Checklist 17 9-26
9-19. Recovery Checklist for Complete System Loss–Checklist 18 9-27
9-20. Checklist for Restoring During a System Upgrade–Checklist 19 9-29
9-21. Checklist for Restoring to a New System–Checklist 19A 9-33
9-22. Choosing the Correct Recovery Procedure for User Information 9-37
9-23. Checklist for Recovering User Information Using Commands 9-38
9-24. Checklist for Recovering User Information Using Option 21 9-40
9-25. Checklist for Recovering User Information Using Options 22 and 23 9-41
9-26. Checklist for Recovering User Information Using Operational Assistant Backup Tapes 9-42
10-1. SRC Codes When Loading the Licensed Internal Code 10-4
10-2. SRC Codes When Loading the Licensed Internal Code 10-5
10-3. SRC Codes When Loading the Licensed Internal Code 10-10
10-4. SRC Codes When Loading the Licensed Internal Code 10-11
11-1. Configuration Disk While Installing the Operating System 11-5
12-1. Recovery for Damaged Objects by Object Type 12-6
13-1. Object Types That Require Special Procedures for Deleting 13-11
13-2. Tasks for Restoring User ASP Objects . . 13-16
15-1. Commands for Changing System Information 15-1
15-2. How User Profiles Are Restored 15-1
15-3. Results of Restoring User Profiles 15-2
15-4. How Configuration Objects Are Restored . 15-5
15-5. Methods for Restoring All Libraries–Single Save Operation 15-9
15-6. Methods for Restoring All Libraries–Multiple Save Operations 15-9
15-7. Restoring a File Network 15-13
15-8. Restoring Files That Have Trigger Programs 15-15
15-9. System Actions When Restoring Programs 15-18
15-10. Restoring Objects That Have Hard Links . 15-23
15-11. Using the RST Command for QSYS.LIB Objects 15-24
15-12. *INCLUDE Options on the RST Command–Examples 15-25
16-1. Restore Procedures for Changed Objects . 16-1
18-1. Handling Messages When Restoring Storage 18-4
A-1. Displaying Information about the Load Source Unit A-1
A-2. Displaying Information about a Candidate Load Source Unit A-3
A-3. A6xx xxxx System Reference Codes A-4
B-1. Checklist for Testing the Disaster Recovery Plan B-8
C-1. Objects Saved by Commands According to Object Type C-1
D-1. Recovery for Search Index Services Files . . D-1
D-2. Type of Index Request Created when Using the Restore Document Library Object (RSTDLO) Command D-3

directories cannot be restored from a saved copy of a directory within the /QFPNWSSTG directory.

The time it takes to save the /QFPNWSSTG directory is significantly less than the time it takes to save the /QLANSrv directory. To take advantage of this performance difference, consider the following save strategy:

- When you perform a regular full backup, such as option 21 or option 23 on the Save menu, make sure that the File Server I/O Processor is varied off. The /QFPNWSSTG directory will be saved.
- Put objects that change frequently, such as files, in one or two sub-directories in the /QLANSrv directory. Save those directories frequently with the File Server I/O Processor varied on. This enables you to restore individual files if you need to do a partial recovery or to recover changed objects.

- When you save a directory within the /QFPNWSSTG directory, specify SUBTREE(*ALL), which is the default. These directories contain files that must be saved and restored as a group.
- Put your system in a restricted state, if possible, when you save either the /QFPNWSSTG directory or the /QLANSrv directory. This is the only way to ensure that everything is saved.
- The network server description must be varied off to save the /QFPNWSSTG directory. The network server description must be varied on to save objects using the /QLANSrv directory.
- *SAVSYS special authority applies when you save information using the /QFPNWSSTG directory. *SAVSYS special authority does not apply when saving objects using the /QLANSrv directory. To save objects from the /QLANSRV directory, you must have the necessary permission (authority) to the object or LAN administrator authority.
- Authority information for LAN Server/400 objects is stored with the objects, not with the user profiles that have the authority. The SAVSECDTA command and the SAVSYS command do not save authority information for LAN Server/400 objects. The authority information is saved when you save the object, if you have sufficient authority. If you do not have sufficient authority to the object to save the authority information, the object is saved without the authority information.
- *ALLOBJ special authority gives enough authority to save /QLANSrv objects and their authority information if both of the following are true:
  - You are a defined user in the LAN domain.
  - The domain controller is a File Server I/O Processor on the local AS/400 system.

Saving LAN Server/400 Objects with Multiple Names: When LAN Server/400 objects have multiple names, the additional names are called **aliases** and **netnames**. Netnames are temporary and are defined during a session. Definitions for aliases are stored in the LAN Server domain controller data base (DCDB). They are similar to symbolic links in the QOpenSys file system.

When you vary on the first network server description in the domain, the LAN Server/400 program creates directories for each of the aliases that is defined. When you vary on a network server description or a remote LAN server, the LAN Server/400 program creates directories for each of the netnames that is currently defined.

In Figure 5-6 on page 5-12, all the actual files and directories are in the path /QLANSrv/NWS/FSI1/DSK. The directories /DOS_APPS and /OS2_APPS contain aliases. The directories MYFILES and APPLS contain netnames.

Objects are marked to ensure that you save the contents of an object only once, even if the object has more than one name. If you save the entire /QLANSrv directory, you are saving each file and directory only once, even if it has aliases. To save the nicknames (aliases) that have been set up on your system, you must save the DCDB. See "Saving the Domain Controller Database."

Saving the Domain Controller Database: If one of the network servers on your AS/400 business computing system is the domain controller, you need to save the domain controller database (DCDB). Do one of the following to save the DCDB:

- Use the DCDB Replicator service to replicate the DCDB to a backup domain controller.
- Save the server storage space that contains the DCDB directories. Type: `SAVOBJ OBJ(QUSRSYS/server3) OBJTYPE(*SRVSTG)`. For *server3*, substitute the name of the network server description followed by a 3. For example, if the network server description is called MYSERVER, type `OBJ(QUSRSYS/MYSERVER3)`.

Saving Specific LAN Server/400 Objects–Examples: The following example shows how to save a specific directory on a local AS/400 system. You can save a file with the same command.

```
SAV OBJ('/QLANSrv/NWS/FSI1/DSK/T/FILES')
    DEV('/QSYS.LIB/TAP01.DEVD')
```

The following example shows how to save a specific file on a remote system.

```
SAV OBJ('/QLANSrv/NWS/SERVER1/DSK/T/FILES/FILEA.TXT')
    DEV('/QSYS.LIB/TAP01.DEVD')
    SYSTEM(*RMT)
```

Saving the Directory for a File Server I/O Processor–Example: When you save an entire directory, it is like saving a library. You want to stop any update activity against objects in the directory to ensure that everything is saved successfully. Put your system in a restricted state to save one or more File Server I/O Processor directories. This ensures that no AS/400 jobs or client users are updating any data.

The network server description must remain varied on during the save procedure. Its services are necessary to access the data that you are saving.

Use this command to save all local File Server I/O Processor directories:

```
SAV OBJ('/QLANSrv/*')
    DEV('/QSYS.LIB/TAP01.DEVD')
```

Use this command to save the directory for a specific File Server I/O Processor:

```
SAV OBJ('/QLANSrv/NWS/iop-name')
    DEV('/QSYS.LIB/TAP01.DEVD')
```

Saving Network Server Storage Space–Examples: You can save a storage space (in the /QFPNWSSTG directory) to move it to another system. You can also save it for faster recovery in a disaster. You cannot recover individual objects from a saved copy of a network server storage space.

When you save storage space, the network server descriptions must be varied off. Use the Vary Configuration (VRYCFG) command to vary off a File Server I/O Processor.

Use this command to save a specific storage space:

```
SAV OBJ('/QFPNWSSTG/drive-name')
    DEV('/QSYS.LIB/TAP01.DEVD')
```

Use this command to save all storage spaces:

```
SAV OBJ('/QFPNWSSTG/*')
    DEV('/QSYS.LIB/TAP01.DEVD')
```

Output from the SAV Command

When you use the SAV command, you can specify OUTPUT(*PRINT) to receive a report of what was saved. You can also specify that the output be directed to a stream file or to a user space. The topic in the *Backup and Recovery – Advanced* book called "How to Create and Use Output from the SAV and RST Commands" describes this output. The SAV command does not provide the option to create an output file.

Restrictions When Using the SAV Command

The SAV command can be used to save objects from any file system. The topics that follow describe restrictions that apply when using the SAV command.

Restrictions When Saving Across Multiple File Systems: When you use the SAV command to save objects from more than one file system at the same time, the following restrictions apply:

- Different file systems support different types of objects and different methods of naming objects. Therefore, when you save objects from more than one file system with the same command, you cannot specify object names or object types. You can save all objects from all file systems, or you can omit some file systems. These combinations are valid:
  - Saving all objects on the system: `OBJ('/*')`

    Note: Using this command is not the same as using option 21 from the Save menu. Following are the differences between SAV OBJ('/*') and option 21:
    - SAV OBJ('/*') does not put the system in a restricted state.
    - SAV OBJ('/*') does not start the controlling subsystem when it finishes.
    - SAV OBJ('/*') does not provide prompting to change default options.
  - Saving all objects in all file systems except the QSYS.LIB file system and the QDLS file system: `OBJ(('/*') ('/QSYS.LIB' *OMIT) ('/QDLS' *OMIT))`
  - Saving all objects in all files systems except the QSYS.LIB file system, the QDLS file system, and one or more other file systems: `OBJ(('/*') ('/QSYS.LIB' *OMIT) ('/QDLS' *OMIT) ('/other values' *OMIT))`
- Values for other parameters of the SAV command are supported only for some file systems. You must choose values that are supported by all file systems. Specify the following parameters and values:

CHGPERIOD	Default
PRECHK	*NO
UPDHST	*YES
LABEL	*GEN
SAVACT	*NO
OUTPUT	*NONE
SUBTREE	*ALL
SYSTEM	*LCL
DEV	Must be a tape device

- The following are required when you specify SAV OBJ('/*'):
  - The system must be in a restricted state.
  - You must have *SAVSYS or *ALLOBJ special authority.
  - You must specify VOL(*MOUNTED).

  Note: SAV OBJ('/*') is not the recommended method for saving the entire system. Use option 21 from the Save menu to save the entire system.

Restrictions When Saving Objects from the QSYS.LIB File System: When you use the SAV command to save objects from the QSYS.LIB (library) file system, the following restrictions apply:

- The OBJ parameter must have only one name.
- The OBJ parameter must match the way that you can specify objects on the SAVLIB command and the SAVOBJ command:

  - You can save a library: `OBJ('/QSYS.LIB/library-name.LIB')`.
  - You can save all the objects in a library: `OBJ('/QSYS.LIB/library-name.LIB/*')`.
  - You can save all objects of a particular type in a library: `OBJ('/QSYS.LIB/library-name.LIB/*.object-type')`
  - You can save a specific object name and object type in a library: `OBJ('/QSYS.LIB/library-name.LIB/object-name.object-type')`
  - You can save all the members in a file using either of the following:
    - `OBJ('/QSYS.LIB/library-name.LIB/file-name.FILE/*')`
    - `OBJ('/QSYS.LIB/library-name.LIB/file-name.FILE/*.MBR')`
  - You can save a specific member in a file: `OBJ('/QSYS.LIB/library-name.LIB/file-name.FILE/member-name.MBR')`

- You can specify only object types that are allowed on the SAVOBJ command. For example, you cannot use the SAV command to save user profiles, because OBJTYPE(*USRPRF) is not allowed on the SAVOBJ command.
- Some libraries in the QSYS.LIB file system cannot be saved with the SAVLIB command because of the type of information they contain. Following are examples:
  - The QDOC library, because it contains documents
  - The QSYS library, because it contains system objects.

  You cannot use the SAV command to save these entire libraries:

QDOC	QSRV
QDOCnnnn	QSPL
QRECOVERY	QSYS
QRPLOBJ	QTEMP

- Other parameters must have these values:

SUBTREE	*ALL
SYSTEM	*LCL
OUTPUT	*NONE
CHGPERIOD	Start date cannot be *LASTSAVE End date must be *ALL End time must be *ALL Default, if a file member is specified

Restrictions When Saving Objects from the QDLS File System: When you use the SAV command to save objects from the QDLS (document library services) file system, the following restrictions apply:

- The OBJ and SUBTREE parameters must be one of the following:
  - `OBJ('/QDLS/path/folder-name') SUBTREE(*ALL)`
  - `OBJ('/QDLS/path/document-name') SUBTREE(*OBJ)`
- Other parameters must have these values:

SYSTEM	*LCL
OUTPUT	*NONE
CHGPERIOD	Start date cannot be *LASTSAVE End date must be *ALL End time must be *ALL Default, if `OBJ('/QDLS/path-name/document-name') SUBTREE(*ALL)` specified
PRECHK	*NO
UPDHST	*YES
SAVACT	Cannot be *SYNC
SAVACTMSGQ	*NONE

How to Save All User Data

This topic describes the procedure for saving all user data from your system. Table 5-7 shows several situations when you might need to save and restore your entire system. It shows which save and restore procedures are appropriate for each situation.

Table 5-7 (Page 1 of 2). Procedures for Saving and Restoring the Entire System

Situation	Save Procedure	Restore Procedure
You have purchased a new system that has a higher release level of the OS/400 licensed program than your current system. You want to move all your data from your old system to your new system.	"Steps for Saving All User Data" on page 5-16.	"Restoring Your Information to a New System–Checklist 19A" on page 9-33.

Table 5-7 (Page 2 of 2). Procedures for Saving and Restoring the Entire System

Situation	Save Procedure	Restore Procedure
You are upgrading your processor model with an MES (Miscellaneous Equipment Specification). The upgrade procedure requires replacing some or all of the disk units on your system and installing a new release of the operating system.	Install the latest release of the operating system on your current system. Save your entire system using option 21 from the Save menu. Then perform the hardware upgrade.	"Restoring Your Information during a System Upgrade–Checklist 19" on page 9-29.
You want to prepare for disaster recovery, or you need to restore your entire system after a disaster. You intend to restore all of your data to a new system or to a system at a hot-site. The target system is running the same release of the OS/400 licensed program as the system on which your save tapes were created.	Save your entire system using option 21 from the Save menu.	"Recovering after a Complete System Loss–Checklist 18" on page 9-27.

Steps for Saving All User Data

Use this procedure to save user data so that you can move your entire system to a different system that is running a higher release. Do the following:

__ **Step 1** Some system customization information that is stored in the QSYS library cannot be saved. This includes network attributes, system values, the system reply list, and configuration information. You must manually re-create this information on your new or upgraded system. In addition, you will not be able to recover your problem log and your question and answer database. Use the procedure described in "Task 1–Printing System Documentation and Preparing to Save" on page 4-2 to print your current values. Skip printing access path recovery times. Access path recovery times are a new feature with V3R1 of the OS/400 licensed program.

__ **Step 2** Print a list of all objects in IBM-supplied libraries QGPL, QGPL38, QUSRSYS, and QDSNX. These libraries may contain user data that you wish to move to the target system.

```
DSPLIB LIB(QGPL QGPL38 QUSRSYS QDSNX) OUTPUT(*PRINT)
```

__ **Step 3** Process the objects in the recovery (QRCL) library:

__ **Step a.** Print a list of the objects in QRCL:

```
DSPLIB LIB(QRCL) OUTPUT(*PRINT)
```

If library QRCL does not exist, or there are no objects in the library, skip to step 4.

__ **Step b.** Delete the objects in the QRCL library or move them to another library. The objects were placed in the QRCL library when you ran the Reclaim Storage (RCLSTG) command. See "Reclaiming Storage" on page 8-3 for more information.

__ **Step 4** Change the system operator message queue to break mode:

```
CHGMSGQ MSGQ(QSYSOPR) DLVRY(*BREAK) SEV(60)
```

__ **Step 5** Place the system in a restricted state to improve save performance and to make sure that all objects can be saved. Type:

```
ENDSBS SBS(*ALL) OPTION(*CNTRLD) DELAY(600)
```

Note: For the delay parameter, specify a number of seconds that allows your system time to bring most jobs to a normal end. On a large, busy system, you may need a longer delay.

__ **Step 6** Change the delivery mode of the system operator message queue by typing:

```
CHGMSGQ MSGQ(QSYSOPR) DLVRY(*BREAK) SEV(99)
```

__ **Step 7** Save user profiles and mail (distribution objects) by typing one of the following:

- If your source system is at V1R1M0 or V1R1M2, enter the following:

  ```
  SAVSYS DEV(tape-device-name) ENDOPT(*LEAVE)
  ```

- If your source system is at V1R2M0 through V2R1M1, enter the following:

  ```
  SAVSECDTA DEV(tape-device-name) ENDOPT(*LEAVE)
     MAIL(*YES)
  ```

  Note: You must also use the SAVDLO command to save the document portion of the mail.

- If your source system is at V2R2M0 or later, enter the following:

  ```
  SAVSECDTA DEV(tape-device-name) ENDOPT(*LEAVE)
  ```

  Note: The SAVDLO command saves distribution objects (mail) on systems running V2R2M0 and later releases.

__ **Step 8** Use the SAVOBJ command to save user data from files that have names beginning with QAO* in library QUSRSYS. These files include system directory files, distribution list files, office calendar files, office enrollment files, and document library search index files. Type the following command:

```
SAVOBJ OBJ(QAO*) LIB(QUSRSYS) DEV(tape-device-name)
      ENDOPT(*LEAVE) OBJTYPE(*FILE) ACCPTH(*YES)
```

__ **Step 9** Save all user libraries by typing one of the following:

- If your source system is V2R1M0 or a later release, type:

  ```
  SAVLIB LIB(*ALLUSR) DEV(tape-device-name)
       ENDOPT(*LEAVE) ACCPTH(*YES)
  ```

  Note: Do not specify *NONSYS for the LIB parameter because this option saves IBM libraries in addition to user libraries.

- If your source system is earlier than V2R1M0, the *ALLUSR value is not available. You can specify up to 50 libraries on each SAVLIB command when saving the user libraries. If you have a large number of user libraries to save, you may want to create a CL program to perform the SAVLIB operations.

  Type the following:

  ```
  SAVLIB LIB(user1 user2 userN) DEV(tape-device-name)
       ENDOPT(*LEAVE) ACCPTH(*YES)
  ```

__ **Step 10** You cannot restore IBM-supplied libraries, such as QGPL to a system running a different release of the operating system. Therefore, you must save individual user objects from these libraries by doing the following:

__ **Step a.** Save user output queues, spelling aid dictionaries, job scheduler entries, and message queues from library QUSRSYS, by typing:

```
SAVOBJ OBJ(*ALL) LIB(QUSRSYS)
     DEV(tape-device-name) ENDOPT(*LEAVE)
     OBJTYPE(*MSGQ *OUTQ *SPADCT *JOBSCD)
```

__ **Step b.** Find the listings from step 2 on page 5-16. Mark the user objects that you need to save. Do not save IBM objects from a previous release to the current-release system except for IBM-supplied source files. The IBM-supplied source files in library QGPL have the naming convention QxxxSRC, where

xxx identifies the type of source file (such as QCLSRC, QCMDSRC, QDDSSRC). Most IBM objects begin with the letter 'Q'. Other IBM objects can usually be identified by the text associated with the object (for example, created by Auto-Configuration). If you have created members into IBM-supplied source files, include these files on the SAVOBJ command.

For each object you want to save, type the following:

```
SAVOBJ OBJ(object-name) LIB(library-name)
     DEV(tape-device-name) ENDOPT(*LEAVE)
```

Note: You can specify up to 50 object names on each SAVOBJ command. If the source system is V2R2M0 or later, you can specify up to 300 object names.

__ **Step 11** To save all documents, folders, and mail (distribution objects), type the following:

```
SAVDLO DLO(*ALL) FLR(*ANY) DEV(tape-device-name)
     ENDOPT(*REWIND)
```

__ **Step 12** Print the job log and keep it with the save media. You may need it to determine what libraries and objects to restore on the target system. Type the following:

```
SIGNOFF *LIST
```

Or

```
DSPJOBLOG OUTPUT(*PRINT)
```

__ **Step 13** Start subsystems

Enter the STRSBS command for the controlling subsystem and any other subsystems that must be active for normal system operations.

```
STRSBS SBSD(subsystem-name)
```

Recovering after a Complete System Loss–Checklist 18

| This checklist should be used if you need to restore your entire system to a different system that is running the same release
| of the operating system as the system on which you created your save tapes.

Before you begin your recovery, make a copy of this checklist. Fill in the appropriate areas as you and the service representative perform the recovery steps. This checklist provides an important record of your recovery actions. It may help you to diagnose any problems that occur after the recovery. It may also be useful in evaluating your backup strategy.

Most steps in the checklist include references to other topics in this book. Refer to these topics if you need more information about how to perform a particular step. You may not need to perform some steps, such as restoring objects in directories, if they do not apply in your situation.

Table 9-19 (Page 1 of 2). Recovery Checklist for Complete System Loss–Checklist 18

Task	Start Time	End Time	What To Do	Where To Read More About It
Actions to Be Performed by the User				
___ **Task 1**			Install the Licensed Internal Code using function code 24 (Install).[1]	"How to Use Function Code 24 to Install the Licensed Internal Code" on page 10-7.
___ **Task 2**			Restore the operating system, beginning with "Task 1–Starting to Restore the Operating System" on page 11-3. You are performing a **complete restore** operation.	Chapter 11, "Restoring the Operating System," task 1 through task 6.
___ **Task 3**			If you restored the operating system using distribution tapes, some system information, such as access path recovery times and the system reply list, was returned to default values. Set these values correctly.	"How to Recover System Information" on page 15-1.
___ **Task 4**			Recover user information from your save tapes. Restore changed objects and apply journal entries. **If you are restoring to a different system, you must specify** `ALWOBJDIF(*ALL)` **on the RSTxxx commands**.	"Recovering User Information Using Commands–Checklist 20" on page 9-38.
___ **Task 5**			If do not know what the password is for the QSECOFR profile, change it before signing off: `CHGUSRPRF USRPRF(QSECOFR) PASSWORD(`*`new- password`*`)`	"What Happens When You Restore User Profiles" on page 15-2.
___ **Task 6**			If you restored from distribution tapes, restore your system information to the correct settings.	"How to Recover System Information" on page 15-1.
___ **Task 7**			If you restored to a different system and your security level is 30 or greater, *ALLOBJ special authority has been removed from all user profiles except certain IBM-supplied profiles. Use the CHGUSRPRF command to give *ALLOBJ special authority to users who need it.	"What Happens When You Restore User Profiles" on page 15-2.
___ **Task 8**			Perform a normal IPL.	"Performing a Normal IPL" on page 8-9.

Table 9-19 (Page 2 of 2). Recovery Checklist for Complete System Loss–Checklist 18

Task	Start Time	End Time	What To Do	Where To Read More About It
1			If you have a 2440 Tape Unit with the high-speed feature enabled, you must disable it before restoring the Licensed Internal Code. See "Disabling and Enabling the High-Speed Feature on the 2440 Tape Unit" on page 10-14 for instructions. You may enable the feature again after you complete all the steps in Task 1.	

Restoring Your Information during a System Upgrade–Checklist 19

This checklist should be used if you need to restore your information when you are upgrading your system to a new model by installing an MES and the upgrade requires replacing disk units. Use this procedure to restore your information to your upgraded system after you have done the following:

- Installed the new release on your system.
- Saved your entire system using option 21 from the Save menu.
- Upgraded your hardware.

You are restoring your information to the same release from which it was saved.

Do not use this checklist to restore your information to a new system running a higher release of the OS/400 licensed program. In that case, use "Restoring Your Information to a New System–Checklist 19A" on page 9-33.

For complete information about procedures for upgrading, see the *System Upgrade Road Map* book.

Before you begin your restore operation, make a copy of this checklist. Fill in the appropriate areas as you and the service representative perform the steps for restoring. This checklist provides an important record of your actions. It may help you to diagnose any problems that occur after you restore. It may also be useful in evaluating your backup strategy.

Most steps in the checklist include references to other topics in this book. Refer to these topics if you need more information about how to perform a particular step. You may not need to perform some steps, such as restoring objects in folders, if they do not apply in your situation.

Table 9-20 (Page 1 of 4). Checklist for Restoring During a System Upgrade–Checklist 19

Task	Start Time	End Time	What To Do	Where To Read More About It
Actions to Be Performed by the User				
___ **Task 1**			Install the Licensed Internal Code using function code 24 (Install).1 Do this step only if the service representative has not already installed the Licensed Internal Code.	"How to Use Function Code 24 to Install the Licensed Internal Code" on page 10-7.
___ **Task 2**			Recover your disk configuration.	"Recovering Your Disk Configuration" on page 10-12.
___ **Task 3**			Restore the operating system, beginning with "Task 1–Starting to Restore the Operating System" on page 11-3. You are performing a **complete restore** operation. Make sure that you set the value for the *Enable automatic configuration* prompt to No on the Set Major System Options display ("Task 4–Setting Major System Options" on page 11-11). Also, set the value for the QIPLTYPE system value to 2 ("Task 5–Defining or Changing the System at IPL" on page 11-11).	Chapter 11, "Restoring the Operating System," task 1 through task 6.
___ **Task 4**			If you restored the operating system using distribution tapes, some system information, such as access path recovery times and the system reply list, was returned to default values. Set these values correctly.	"How to Recover System Information" on page 15-1.

Table 9-20 (Page 2 of 4). Checklist for Restoring During a System Upgrade–Checklist 19

Task	Start Time	End Time	What To Do	Where To Read More About It
___ **Task 5**			If your system is not already in a restricted state, ensure that all users are off the system and that all jobs are ended. Then type `ENDSBS SBS(*ALL) OPTION(*CNTRLD) DELAY(600)`[2,3].	"Putting Your System in a Restricted State" on page 8-3.
___ **Task 6**			If necessary, change the QALWOBJRST system value. Write the old value here: _____	"Setting the QALWOBJRST System Value to Allow Complete Recovery" on page 8-5.
___ **Task 7**			Change the system value that controls whether the job log wraps when it is full. Use the Work with System Values command: WRKSYSVAL QJOBMSGFL. Write down the current value here: _____ Then change the value to *WRAP.	*Work Management* book.
___ **Task 8**			Prevent messages that are not related to the recovery from interrupting by typing: `CHGMSGQ MSGQ(QSYSOPR) DLV(*NOTIFY) SEV(99)`	
___ **Task 9**			Restore user profiles: `RSTUSRPRF DEV(TAP01) USRPRF(*ALL) ENDOPT(*LEAVE) ALWOBJDIF(*ALL)`	"How to Restore User Profiles" on page 15-1.
___ **Task 10**			Ensure that any configured devices that are not used for the restore operation are varied off.	
___ **Task 11**			Ensure that the configured devices that you are using (your workstation, tape devices, and tape controllers) are varied on.	
___ **Task 12**			Restore the SRM database from your SAVSYS tapes: `RSTCFG OBJ(*SRM) DEV(TAP01) ENDOPT(*REWIND) SRM(*ALL)`	"How to Restore Configuration Objects" on page 15-5. **Warning:** Read note 4 before performing this step.
___ **Task 13**			Restore the device configuration objects: `RSTCFG OBJ(*ALL) OBJTYPE(*ALL) DEV(TAP01) ENDOPT(*LEAVE) SRM(*NONE) ALWOBJDIF(*ALL)`	"How to Restore Configuration Objects" on page 15-5.
___ **Task 14**			You or the hardware service representative should correct the system resource management (SRM) database to match the hardware on your upgraded system.	"Correcting Problems with the System Resource Management Database" on page 15-5.
___ **Task 15**			The hardware service representative should upgrade the configuration list and use option 5 (Change description label location) from the Work with Hardware Products (WRKHDWPRD) command to complete the device description and cable migration.	Chapter 7 of the *AS/400 Service Functions, SY44-3902*, book.

Table 9-20 (Page 3 of 4). Checklist for Restoring During a System Upgrade–Checklist 19

Task	Start Time	End Time	What To Do	Where To Read More About It
___ **Task 16**			If you started subsystems or performed an IPL in step 15 or step 14, place your system in a restricted state again by typing: `ENDSBS SBS(*ALL) OPTION(*CNTRLD) DELAY(600)`[2,3].	"Putting Your System in a Restricted State" on page 8-3.
___ **Task 17**			Restore all user libraries: `RSTLIB SAVLIB(*NONSYS) DEV(TAP01) ENDOPT(*LEAVE) MBROPT(*ALL) ALWOBJDIF(*ALL)`	"How to Restore Libraries" on page 15-8. **Warning:** Read note 5 before you perform this step.
___ **Task 18**			Restore your last complete save of document library objects: `RSTDLO DLO(*ALL) SAVFLR(*ANY) DEV(TAP01) ENDOPT(*LEAVE) ALWOBJDIF(*ALL)`	"How to Restore Documents and Folders" on page 15-19.
___ **Task 19**			Restore your last complete save of directories: `RST DEV('/QSYS.LIB/TAPxxx.DEVD') OBJ(('/*') ('QSYS.LIB' *OMIT) ('QDLS' *OMIT)) ENDOPT(*UNLOAD) ALWOBJDIF(*ALL)`	"How to Restore Objects in Directories" on page 15-23.
___ **Task 20**			Restore authority. Type: `RSTAUT`	"How to Restore Object Authorities" on page 15-4.
___ **Task 21**			If you changed the console type on the new system, you need to create a new controller and device description.	"Recovering When You Change the Console Type" on page 15-7.
___ **Task 22**			If necessary, change the QALWOBJRST system value.	"Setting the QALWOBJRST System Value to Restrict Restore Operations" on page 8-5.
___ **Task 23**			If necessary, change the QJOBMSGFL system value back to its original value by using the WRKSYSVAL command.	*Work Management* book.
___ **Task 24**			If you are not sure what the password is for the QSECOFR profile, change it now: `CHGUSRPRF USRPRF(QSECOFR) PASSWORD(`*`new- password`*`)`	"What Happens When You Restore User Profiles" on page 15-2.
___ **Task 25**			Change the QIPLTYPE system value to 0 by using the WRKSYSVAL command.	
___ **Task 26**			Perform a normal IPL and return the system to normal operations.	"Performing a Normal IPL" on page 8-9.
___ **Task 27**			Review job logs or output from your restore operations to ensure that all objects were restored successfully.	"How to Verify That Objects Are Restored Successfully" on page 8-6.

Table 9-20 (Page 4 of 4). Checklist for Restoring During a System Upgrade–Checklist 19

Task	Start Time	End Time	What To Do	Where To Read More About It
1			If you have a 2440 Tape Unit with the high-speed feature enabled, you must disable it before restoring the Licensed Internal Code. See "Disabling and Enabling the High-Speed Feature on the 2440 Tape Unit" on page 10-14 for instructions. You may enable the feature again after you complete all the steps in Task 1.	
2			Your system must be in a restricted state to restore user profiles. Other steps may not require a restricted state. However, to ensure the success of your restore operation and better performance when you are restoring information, a restricted state is recommended.	
3			For the delay parameter, specify a number of seconds that allows your system time to bring most jobs to a normal end. On a large, busy system, you may need a longer delay.	
4			Restore the SRM database only when you have installed an MES upgrade and you are restoring to the same system. Restore from a backup that was created immediately before you upgraded your hardware. Also, your hardware service representative must update the configuration in step 15. If you restore the SRM database under other circumstances, you will cause problems that can be fixed only by a hardware service representative.	
5			You may need to restore libraries individually, in a specific order, to ensure that your journaling environment is established correctly or that file networks are restored completely. Read "Sequence for Restoring Related Objects" on page 8-3.	

Restoring Your Information to a New System–Checklist 19A

This checklist should be used if you need to restore your information to a different AS/400 that is running a higher release of the OS/400 licensed program than the system on which you created your save tapes. This method is sometimes used for a system upgrade when a replacement processor is installed. Do not use this checklist to restore your information to the same system after it has been upgraded. In that case, use "Restoring Your Information during a System Upgrade–Checklist 19" on page 9-29. The procedures in this checklist assume the following:

- You have saved your information using the procedures in "Steps for Saving All User Data" on page 5-16.
- The Licensed Internal Code, the operating system, and licensed programs are already installed on the new (target) system.
- No user data exists on the target system.
- You have the new system set up to configure devices automatically, or you have configured them manually. You will not be restoring configuration information from your old system.

The *Backup and Recovery – Advanced* book has more information about moving between systems running different releases.

Before you begin your restore operation, make a copy of this checklist. Fill in the appropriate areas as you and the service representative perform the steps for restoring. This checklist provides an important record of your actions. It may help you to diagnose any problems that occur after you restore. It may also be useful in evaluating your backup strategy.

Most steps in the checklist include references to other topics in this book. Refer to these topics if you need more information about how to perform a particular step. You may not need to perform some steps, such as restoring objects in folders, if they do not apply in your situation.

Table 9-21 (Page 1 of 4). Checklist for Restoring to a New System–Checklist 19A

Task	Start Time	End Time	What To Do	Where To Read More About It
Actions to Be Performed by the User				
___ **Task 1**			Sign on as QSECOFR to ensure that you have adequate authority to perform the restore operations.	
___ **Task 2**			Type `GO LICPGM` to verify that the target system has the current release (V3R1).	
___ **Task 3**			Set the values for system customization information. Use the information that you printed in step 1 on page 5-16 ("Steps for Saving All User Data"). In particular, be sure that the target system has the correct value for the QSECURITY system value and for the network name (network attribute).	"How to Recover System Information" on page 15-1.
___ **Task 4**			If you changed the value of the QSECURITY system value or the system name, perform an IPL so that the new value takes effect.	
___ **Task 5**			If your system is not already in a restricted state, ensure that all users are off the system and that all jobs are ended. Then type `ENDSBS SBS(*ALL) OPTION(*CNTRLD) DELAY(600)`[2,3].	"Putting Your System in a Restricted State" on page 8-3.
___ **Task 6**			If necessary, change the QALWOBJRST system value. Write the old value here: _____	"Setting the QALWOBJRST System Value to Allow Complete Recovery" on page 8-5.

Table 9-21 (Page 2 of 4). Checklist for Restoring to a New System–Checklist 19A

Task	Start Time	End Time	What To Do	Where To Read More About It
___ **Task 7**			Change the system value that controls whether the job log wraps when it is full. Use the Work with System Values command: WRKSYSVAL QJOBMSGFL. Write down the current value here: _____ Then change the value to *WRAP.	*Work Management* book.
___ **Task 8**			Prevent messages that are not related to the recovery from interrupting by typing: `CHGMSGQ MSGQ(QSYSOPR) DLV(*BREAK) SEV(99)`	
___ **Task 9**			Restore user profiles: `RSTUSRPRF DEV(TAP01) USRPRF(*ALL) ENDOPT(*LEAVE) MAIL(*NO) ALWOBJDIF(*ALL)`	"How to Restore User Profiles" on page 15-1.
___ **Task 10**			Restore personal directories, distribution lists, office enrollment and calendar files to the target system by typing the following: `RSTOBJ OBJ(QAOK* QAOS* QAOF* QAOC* QAOO* QAO1*) SAVLIB(QUSRSYS) DEV(tape-device-name) OBJTYPE(*FILE) ENDOPT(*REWIND) MBROPT(*ALL) ALWOBJDIF(*ALL)`	**Warning:** Read note 1 before performing this step.
___ **Task 11**			Type `INZSYS` to initialize the office-related files in library QUSRSYS. Inquiry message CPA3703 is displayed if the current release of the system files contains user-created office data. Specify I (Ignore) in response to the message to replace the current-release data with the new data.	
___ **Task 12**			Optionally, delete any obsolete QAO* files by using the Work with Objects (WRKOBJ) command.	Read note 4.
___ **Task 13**			If you did not restore the QAO* files, enroll users in the system distribution directory using the Work with Directory Entries (WRKDIRE) command.	
___ **Task 14**			If your source system was running V1R2M0 through V2R1M1, and you want to restore mail, type the following: `RSTUSRPRF DEV(`*`tape-device-name`*`) USRPRF(*ALL) MAIL(*YES) ALWOBJDIF(*ALL)`	
___ **Task 15**			Use the Work with User Profiles (WRKUSRPRF) command to ensure that the maximum storage (MAXSTG) parameter for the QUSER profile and the QSYSOPR profile is set to *NOMAX.	*Security – Reference* book.

Table 9-21 (Page 3 of 4). Checklist for Restoring to a New System–Checklist 19A

Task	Start Time	End Time	What To Do	Where To Read More About It
___ **Task 16**			If you restored to a different system and your security level is 30 or greater, *ALLOBJ special authority has been removed from all user profiles except certain IBM-supplied profiles. Use the CHGUSRPRF command to give *ALLOBJ special authority to users who need it.	"What Happens When You Restore User Profiles" on page 15-2.
___ **Task 17**			Restore all user libraries. If you used the *ALLUSR parameter to save the libraries, type the following: `RSTLIB SAVLIB(*ALLUSR) OMITLIB(QGPL QGPL38 QUSRSYS QDSNX) DEV(`*`tape-device-name`*`) ENDOPT(*LEAVE) MBROPT(*ALL) ALWOBJDIF(*ALL).` If you specified individual libraries on the SAVLIB command, type the following: `RSTLIB SAVLIB(` *`library-name library-name library-name`*`) DEV(`*`tape-device-name`*`) ENDOPT(*LEAVE) MBROPT(*ALL) ALWOBJDIF(*ALL)`	"How to Restore Libraries" on page 15-8 **Warning:** Read note 5.
___ **Task 18**			Use the RSTOBJ command to restore user objects to the IBM-supplied libraries, such as QGPL and QUSRSYS. You saved the objects in step 10 on page 5-17 ("Steps for Saving All User Data").	
___ **Task 19**			Restore Client Access/400 folders by typing: `RSTDLO DLO(*ALL) SAVFLR(QPRFFLR QWPDOCS QDIADOCS) DEV(`*`tape-device-name`*`) ALWOBJDIF(*ALL)`	
___ **Task 20**			Restore your last complete save of document library objects: `RSTDLO DLO(*ALL) SAVFLR(*ANY) DEV(`*`tape-device-name`*`) ENDOPT(*LEAVE)` . Do not specify ALWOBJDIF(*ALL), because this will cause your old version of Client Access/400 to be restored.	"How to Restore Documents and Folders" on page 15-19. The chapter of the *Backup and Recovery – Advanced* called "Release-to-Release Support" has more information about restoring documents from a previous release.
___ **Task 21**			Restore authority. Type: `RSTAUT`	"How to Restore Object Authorities" on page 15-4.
___ **Task 22**			If necessary, change the QALWOBJRST system value.	"Setting the QALWOBJRST System Value to Restrict Restore Operations" on page 8-5.
___ **Task 23**			If necessary, change the QJOBMSGFL system value back to its original value by using the WRKSYSVAL command.	*Work Management* book.
___ **Task 24**			If you are not sure what the password is for the QSECOFR profile, change it now: `CHGUSRPRF USRPRF(QSECOFR) PASSWORD(`*`new- password`*`)`	"What Happens When You Restore User Profiles" on page 15-2.

Table 9-21 (Page 4 of 4). Checklist for Restoring to a New System–Checklist 19A

Task	Start Time	End Time	What To Do	Where To Read More About It
___ **Task 25**			Perform a normal IPL and return the system to normal operations.	"Performing a Normal IPL" on page 8-9.
___ **Task 26**			Review job logs or output from your restore operations to ensure that all objects were restored successfully.	"How to Verify That Objects Are Restored Successfully" on page 8-6.
___ **Task 27**			If you have problems with Client Access/400, you may have restored the folders from the previous release. See note 6 for recovery instructions.	
___ **Task 28**			If you have problems with your hardware configuration or some of your devices, you may have restored the SRM database by mistake. See "Correcting Problems with the System Resource Management Database" on page 15-5 for recovery instructions.	

1 This step should be performed only if the current release has just been installed on the target system or it was preloaded. There must be no user data on the system. In addition, the source system must be at V1R2M0 or later. The QAO* files cannot be moved if the source system is at V1R1 or V1R1.2. The user data in the QAO* files from the source system cannot be merged with existing data on the target system. When you restore the files, you may receive multiple CPI8A17 messages indicating several files containing document details were not restored. These messages can be ignored.

The document library search index files (QUSRSYS/QAOSS*) are not restored. They should already exist in QUSRSYS after you successfully install the operating system. The structure of these files is not compatible between releases.

2 Your system must be in a restricted state to restore user profiles. Other steps may not require a restricted state. However, to ensure the success of your restore operation and better performance when you are restoring information, a restricted state is recommended.

3 For the delay parameter, specify a number of seconds that allows your system time to bring most jobs to a normal end. On a large, busy system, you may need a longer delay.

4 Deleting obsolete files is optional. It will free space on your system. You can identify an obsolete file by its name and description. The text of each obsolete file has the prefix *Old Name*. You must delete obsolete logical files before deleting obsolete physical files.

5 You may need to restore libraries individually, in a specific order, to ensure that your journaling environment is established correctly or that file networks are completely restored. Read "Sequence for Restoring Related Objects" on page 8-3

6 If you have problems with Client Access/400, try the following procedure to recover:

1. Delete the Client Access/400 licensed program by using option 12 from the Licensed Program menu.
2. Delete the Client Access/400 host servers (5763-SS1) by using option 12 from the Licensed Program menu.
3. Install the Client Access/400 licensed program and the host servers by using option 11 from the Licensed Program menu.

Choosing the Procedure to Recover User Information

Your first step in a recovery is to return your system to a normal operating condition. This may require:

- Replacing hardware
- Restoring or installing the Licensed Internal Code
- Performing an IPL after the system ends abnormally

When your system is running normally, you are ready to recover user information. Use Table 9-22 to determine the procedure you should follow. In the table, N/A in a column means that the recovery procedure is the same, whether you respond yes or no.

Table 9-22. Choosing the Correct Recovery Procedure for User Information

Are You Recovering All ASPs?	Save Procedure Used	Do You Use SAVCHGOBJ or Journaling?	Do You Want to Use Menu Options to Recover?	Recovery Procedure to Follow
Yes	Commands	N/A	See note 1.	"Recovering User Information Using Commands–Checklist 20" on page 9-38
Yes	Save menu option 21	No	Yes	"Using Option 21 from the Restore Menu–Checklist 21" on page 9-40
Yes	Save menu option 21	Yes	N/A	"Recovering User Information Using Commands–Checklist 20" on page 9-38
Yes	Save menu option 21	No	No	"Recovering User Information Using Commands–Checklist 20" on page 9-38
Yes	Save menu option 22 Save menu option 23	No	Yes	"Using Options 22 and 23 from the Restore Menu–Checklist 22" on page 9-41
Yes	Save menu option 22 Save menu option 23	Yes	N/A	"Recovering User Information Using Commands–Checklist 20" on page 9-38
Yes	Save menu option 22 Save menu option 23	No	No	"Recovering User Information Using Commands–Checklist 20" on page 9-38
Yes	Save menu option 21 Save menu option 23	No	Yes	"Using Options 22 and 23 from the Restore Menu–Checklist 22" on page 9-41
Yes	Save menu option 21 Save menu option 23	Yes	N/A	"Recovering User Information Using Commands–Checklist 20" on page 9-38
Yes	Save menu option 21 Save menu option 23	No	No	"Recovering User Information Using Commands–Checklist 20" on page 9-38
Yes	Operational Assistant Backup[2]	N/A	N/A	"Recovering User Information Using Tapes from Operational Assistant Backup–Checklist 23" on page 9-42
No	Any	N/A	N/A	"Recovering User Information Using Commands–Checklist 20" on page 9-38

1 If you save using commands rather than menu options, you should recover using commands.

2 You have saved using either the RUNBCKUP command or the Run Backup menu.

Recovering User Information Using Commands–Checklist 20

This checklist shows the sequence of steps you should use to recover user information using commands. You may need to perform some tasks more than once. The correct steps for your situation depend on:

- How you saved your information.
- Whether you use journaling or whether applications you have purchased use journaling.
- Whether you have document library objects.
- Whether you have objects in directories.
- Whether you save changed objects.

Before you begin recovering user information, make a copy of this checklist. Fill in the appropriate areas as you perform the recovery steps. This checklist provides an important record of your recovery actions. It may help you diagnose any problems that occur after the recovery. It may also be useful in evaluating your backup strategy.

Most steps in the checklist include references to other topics in this book. Refer to these topics if you need more information about how to perform a particular step. You may not need to perform some steps, such as restoring objects in directories, if they do not apply in your situation.

Restoring to a Different System?

- You must specify `ALWOBJDIF(*ALL)` on the RSTxxx commands.
- You must specify `SRM(*NONE)` on the RSTCFG command.
- If your system was at security level 30 or higher when you saved, *ALLOBJ special authority is removed from all user profiles except QSECOFR when you restore.
- Network attributes are reset to the IBM-supplied defaults.

Table 9-23 (Page 1 of 2). Checklist for Recovering User Information Using Commands

Task	Start Time	End Time	What To Do	Where To Read More About It
___ **Task 1**			If your system is not already in a restricted state, ensure that all users are off the system and that all jobs are ended. Then type `ENDSBS SBS(*ALL) OPTION(*CNTRLD) DELAY(600)`[1,2].	"Putting Your System in a Restricted State" on page 8-3.
___ **Task 2**			If necessary, change the QALWOBJRST system value. Write the old value here: _____	"Setting the QALWOBJRST System Value to Allow Complete Recovery" on page 8-5.
___ **Task 3**			If necessary, change the QJOBMSGQFL system value. Write the old value here: _____	"Setting the QJOBMSGQFL System Value to Allow Complete Recovery" on page 8-5.
___ **Task 4**			Prevent messages that are not related to the recovery from interrupting by typing: `CHGMSGQ MSGQ(QSYSOPR) DLV(*NOTIFY) SEV(99)`	
___ **Task 5**			Restore user profiles: `RSTUSRPRF DEV(TAP01) USRPRF(*ALL)`	"How to Restore User Profiles" on page 15-1.
___ **Task 6**			Restore device configuration: `RSTCFG OBJ(*ALL) OBJTYPE(*ALL) DEV(TAP01)`	"How to Restore Configuration Objects" on page 15-5.
___ **Task 7**			Restore the user libraries to each user ASP that you are recovering. If you need to restore the QGPL and QUSRSYS libraries, restore them before any other libraries. Restore the QGPL library before the QUSRSYS library.	"How to Restore Libraries" on page 15-8.

Table 9-23 (Page 2 of 2). Checklist for Recovering User Information Using Commands

Task	Start Time	End Time	What To Do	Where To Read More About It
___ **Task 8**			Restore the ownership for DLOs in the user ASPs you are not restoring.	"Task 7–Reclaiming Document Library Objects" on page 13-7.
___ **Task 9**			Restore your last complete save of document library objects to each user ASP you are recovering.	"How to Restore Documents and Folders" on page 15-19.
___ **Task 10**			Restore your last complete save of directories.	"How to Restore Objects in Directories" on page 15-23.
___ **Task 11**			Restore changed objects and apply journaled changes.	Chapter 16, "Restoring Changed Objects and Applying Journaled Changes," task 1 through task 7.
___ **Task 12**			Restore authority. Type: `RSTAUT`	"How to Restore Object Authorities" on page 15-4.
___ **Task 13**			Reapply any PTFs that were applied since your last SAVSYS operation.	"Restoring Program Temporary Fixes" on page 15-25.
___ **Task 14**			If necessary, change the QALWOBJRST system value.	"Setting the QALWOBJRST System Value to Restrict Restore Operations" on page 8-5.
___ **Task 15**			If necessary, change the QJOBMSGQFL system value.	"Setting the QJOBMSGQFL System Value to Protect Job Logs" on page 8-6.
___ **Task 16**			If you are recovering from a complete system loss, return to "Recovering after a Complete System Loss–Checklist 18" on page 9-27. Continue with task 5 on that checklist.	
___ **Task 17**			Perform a normal IPL.	"Performing a Normal IPL" on page 8-9.
___ **Task 18**			Review job logs or output from your restore operations to ensure that all objects were restored successfully.	"How to Verify That Objects Are Restored Successfully" on page 8-6.

1 Your system must be in a restricted state to restore user profiles. Other steps in the recovery may not require a restricted state. However, to ensure the success of your recovery and better performance when you are restoring information, a restricted state is recommended.

2 For the delay parameter, specify a number of seconds that allows your system time to bring most jobs to a normal end. On a large, busy system, you may need a longer delay.

Using Option 21 from the Restore Menu–Checklist 21

This checklist shows the sequence of steps you should use to recover user information using option 21 from the Restore menu. Option 21 restores your system to your last complete save.

Before you begin recovering user information, make a copy of this checklist. Fill in the appropriate areas as you perform the recovery steps. This checklist provides an important record of your recovery actions. It may help you diagnose any problems that occur after the recovery. It may also be useful in evaluating your backup strategy.

Most steps in the checklist include references to other topics in this book. Refer to these topics if you need more information about how to perform a particular step. You may not need to perform some steps, such as restoring objects in directories, if they do not apply in your situation.

Table 9-24. Checklist for Recovering User Information Using Option 21

Task	Start Time	End Time	What To Do	Where To Read More About It
___ **Task 1**			If necessary, change the QALWOBJRST system value. Write the old value here: _____	"Setting the QALWOBJRST System Value to Allow Complete Recovery" on page 8-5.
___ **Task 2**			Perform option 21 from the Restore menu. Use your most recent tapes from performing option 21 on the Save menu.	"Using Restore Menu Options 21, 22, and 23" on page 14-1.
___ **Task 3**			Reapply any PTFs that were applied since your last SAVSYS operation.	"Restoring Program Temporary Fixes" on page 15-25.
___ **Task 4**			If necessary, change the QALWOBJRST system value.	"Setting the QALWOBJRST System Value to Restrict Restore Operations" on page 8-5.
___ **Task 5**			Perform a normal IPL.	"Performing a Normal IPL" on page 8-9.
___ **Task 6**			Review job logs or output from your restore operations to ensure that all objects were restored successfully.	"How to Verify That Objects Are Restored Successfully" on page 8-6.

Using Options 22 and 23 from the Restore Menu–Checklist 22

This checklist shows the sequence of steps you should use to recover user information using option 22 and 23 from the restore menu. Option 22 restores your IBM-supplied libraries to your last save. Option 23 restores your user libraries to your last save.

Before you begin recovering user information, make a copy of this checklist. Fill in the appropriate areas as you perform the recovery steps. This checklist provides an important record of your recovery actions. It may help you diagnose any problems that occur after the recovery. It may also be useful in evaluating your backup strategy.

Most steps in the checklist include references to other topics in this book. Refer to these topics if you need more information about how to perform a particular step. You may not need to perform some steps, such as restoring objects in directories, if they do not apply in your situation.

Table 9-25. Checklist for Recovering User Information Using Options 22 and 23

Task	Start Time	End Time	What To Do	Where To Read More About It
___ **Task 1**			If necessary, change the QALWOBJRST system value. Write the old value here: _____	"Setting the QALWOBJRST System Value to Allow Complete Recovery" on page 8-5.
___ **Task 2**			Perform option 22 from the Restore menu to restore IBM-supplied libraries. Use your most recent tapes from performing either option 21 or option 22 on the Save menu.	"Using Restore Menu Options 21, 22, and 23" on page 14-1.
___ **Task 3**			Perform option 23 from the Restore menu to restore user libraries. Use your most recent tapes from performing either option 21 or option 23 on the Save menu.	"Using Restore Menu Options 21, 22, and 23" on page 14-1.
___ **Task 4**			Reapply any PTFs that were applied since your last SAVSYS operation.	"Restoring Program Temporary Fixes" on page 15-25.
___ **Task 5**			If necessary, change the QALWOBJRST system value.	"Setting the QALWOBJRST System Value to Restrict Restore Operations" on page 8-5.
___ **Task 6**			Perform a normal IPL.	"Performing a Normal IPL" on page 8-9.
___ **Task 7**			Review job logs or output from your restore operations to ensure that all objects were restored successfully.	"How to Verify That Objects Are Restored Successfully" on page 8-6.

Recovering User Information Using Tapes from Operational Assistant Backup–Checklist 23

This checklist shows the sequence of steps you should use to recover user information when you have saved using Operational Assistant backup. These procedures assume that all of your backup is done using Operational Assistant. You have not mixed Operational Assistant backup with other save methods, with the exception of using the SAV command to save objects in directories.

Before you begin recovering user information, make a copy of this checklist. Fill in the appropriate areas as you perform the recovery steps. This checklist provides an important record of your recovery actions. It may help you diagnose any problems that occur after the recovery. It may also be useful in evaluating your backup strategy.

Most steps in the checklist include references to other topics in this book. Refer to these topics if you need more information about how to perform a particular step. You may not need to perform some steps, such as restoring objects in directories, if they do not apply in your situation.

Table 9-26 (Page 1 of 2). Checklist for Recovering User Information Using Operational Assistant Backup Tapes

Task	Start Time	End Time	What To Do	Where To Read More About It
___ **Task 1**			If your system is operational and the QUSRSYS library is on the system, print the Backup Status and the Backup History by typing: `DSPBCKSTS OUTPUT(*PRINT)`.	
___ **Task 2**			If your system is operational and the QUSRSYS library is on the system, print the Backup List by typing: `DSPBCKUPL OUTPUT(*PRINT)`.	
___ **Task 3**			If your system is not already in a restricted state, ensure all users are off the system. Then type `ENDSBS SBS(*ALL) OPTION(*CNTRLD) DELAY(600)`[1,2].	"Putting Your System in a Restricted State" on page 8-3.
___ **Task 4**			If necessary, change the QALWOBJRST system value. Write the old value here: _____	"Setting the QALWOBJRST System Value to Allow Complete Recovery" on page 8-5.
___ **Task 5**			Prevent messages that are not related to the recovery from interrupting by typing: `CHGMSGQ MSGQ(QSYSOPR) DLV(*NOTIFY) SEV(99)`	
___ **Task 6**			Restore user profiles: `RSTUSRPRF DEV(TAP01) USRPRF(*ALL)`.	"How to Restore User Profiles" on page 15-1.
___ **Task 7**			Restore device configuration: `RSTCFG OBJ(*ALL) OBJTYPE(*ALL) DEV(TAP01)`	"How to Restore Configuration Objects" on page 15-5.
___ **Task 8**			Restore the user libraries to each user ASP that you are recovering.	"How to Restore Your Libraries" on page 17-2
___ **Task 9**			Restore the ownership for DLOs in the user ASPs that you are not restoring.	"Task 7–Reclaiming Document Library Objects" on page 13-7.
___ **Task 10**			Restore your last complete save of document library objects to each user ASP that you are recovering.	"How to Restore Documents and Folders" on page 15-19.
___ **Task 11**			Restore your last complete save of directories.	"How to Restore Objects in Directories" on page 15-23.

Table 9-26 (Page 2 of 2). Checklist for Recovering User Information Using Operational Assistant Backup Tapes

Task	Start Time	End Time	What To Do	Where To Read More About It
___ **Task 12**			Restore incremental backups of libraries.	"How to Restore Libraries That You Saved by Using a Backup List" on page 17-3.
___ **Task 13**			Restore changed objects.	"How to Restore Changed Objects That You Saved by Using a Operational Assistant" on page 17-3.
___ **Task 14**			Restore authority. Type: `RSTAUT`	"How to Restore Object Authorities" on page 15-4.
___ **Task 15**			If necessary, change the QALWOBJRST system value.	"Setting the QALWOBJRST System Value to Restrict Restore Operations" on page 8-5.
___ **Task 16**			Perform a normal IPL.	"Performing a Normal IPL" on page 8-9.
___ **Task 17**			Review job logs or output from your restore operations to ensure that all objects were restored successfully.	"How to Verify That Objects Are Restored Successfully" on page 8-6.

1 Your system must be in a restricted state to restore user profiles. Other steps in the recovery may not require a restricted state. However, to ensure the success of your recovery and better performance when you are restoring information, a restricted state is recommended.

2 For the delay parameter, specify a number of seconds that allows your system time to bring most jobs to a normal end. On a large, busy system, you may need a longer delay.

```
                    Confirm Recover Configuration

Confirming the configuration will automatically IPL the system.
You will return to the DST main menu following IPL.

Press Enter to confirm that the following configuration is correct.
Press F12 to return to change your choice.

Possible configuration found in the system records:

           Serial
ASP  Unit  Number      Type  Model  Address        Status
__   ____  _________   ____  ___    ___________    ____________________
__   ____  _________   ____  ___    ___________    ____________________
__   ____  _________   ____  ___    ___________    ____________________
__   ____  _________   ____  ___    ___________    ____________________
__   ____  _________   ____  ___    ___________    ____________________
__   ____  _________   ____  ___    ___________    ____________________
__   ____  _________   ____  ___    ___________    ____________________
__   ____  _________   ____  ___    ___________    ____________________
                                                                  More...

F12=Cancel
_______________________________________________________________________
```

```
                    Confirm Recover Configuration

Warning: Recovering the configuration will destroy all system
data unless the load source data is restored before continuing
past DST.  You will return to the DST main menu following an
IPL.

Press F10 to confirm your choice to recover configuration.
Press F12 to return to change your choice.

Possible configuration found in the system records:

           Serial
ASP  Unit  Number      Type  Model  Address        Status
__   ____  _________   ____  ___    ___________    ____________________
__   ____  _________   ____  ___    ___________    ____________________
__   ____  _________   ____  ___    ___________    ____________________
__   ____  _________   ____  ___    ___________    ____________________
__   ____  _________   ____  ___    ___________    ____________________
__   ____  _________   ____  ___    ___________    ____________________
                                                                  More...

F10=Confirm recover        F12=Cancel
_______________________________________________________________________
```

__ **Step 6** Check the configuration of disk units on the display. The display shows the disk units that are assigned to each user ASP and to the system ASP (ASP 1). The warning on the display means that the system will clear all data on disk units in the system ASP.

If this configuration is *not* correct, contact a service representative or software support for assistance. Do not proceed further without getting help.

If the configuration that is shown *is* correct, press F10 to confirm the configuration. The system builds the configuration information and returns to the DST menu.

__ **Step 7** Press F12 to cancel the DST menu. You are shown the IPL or Install the System menu.

Stop!

You have now completed recovering your disk configuration. Continue with the next step on your recovery checklist, which is restoring the operating system.

Disabling and Enabling the High-Speed Feature on the 2440 Tape Unit

If you have a 2440 Tape Unit with the high-speed feature enabled, it must be disabled before you can install or restore the Licensed Internal Code. After the restore operation, you can enable the high speed again. The high-speed feature is disabled or enabled from the control panel on the 2440 Tape Unit.

To find the control panel, open the front door of the 2440 Tape Unit. The control panel is located in the upper right-hand corner. The following figure illustrates the control panel.

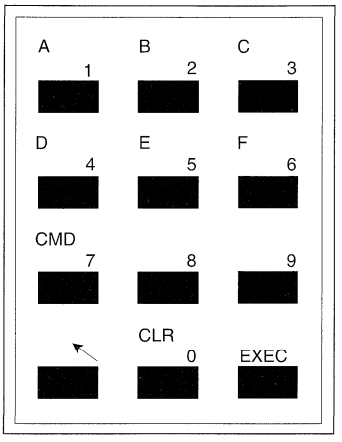

RV2W422-0

Disabling the High-Speed Feature: To disable the high-speed feature before the restore operation, do the following from the control panel:

1. Press the arrow key and then the CMD 7 key.
2. Press the 9 key and then the 2 key.
3. Press the EXEC key.
4. Press the arrow key and then the CMD 7 key.
5. Press the 9 key and then the 3 key.
6. Press the EXEC key.
7. Press the arrow key and then the CMD 7 key.
8. Press the 6 key twice.
9. Press the EXEC key.
10. Press the 1 key.
11. Press the EXEC key.

Enabling the High-Speed Feature: To enable the high-speed feature after the restore operation, do the following from the control panel:

1. Press the arrow key and then the CMD 7 key.
2. Press the 9 key and then the 2 key.
3. Press the EXEC key.
4. Press the arrow key and then the CMD 7 key.
5. Press the 9 key and then the 3 key.
6. Press the EXEC key.
7. Press the arrow key and then the CMD 7 key.
8. Press the 6 key twice.
9. Press the EXEC key.
10. Press the CLR 0 key.
11. Press the EXEC key.

Task 4–Setting Major System Options

__ **Step 1** You are shown the Set Major System Options display:

```
                        Set Major System Options

Type choices, press Enter.

  Enable automatic configuration . . . . . Y           Y=Yes, N=No
  Device configuration naming  . . . . . . *NORMAL     *NORMAL, *S36,
                                                       *DEVADR
  Default special environment. . . . . . . *NONE       *NONE, *S36
```

__ **Step 2**

Enable automatic configuration?

If you choose to enable automatic configuration, the system will create a device description for every device that is attached to your system. The device description will be named according to the value you specify for *Device configuration naming*. You may need to change the names and descriptions of these device descriptions later.

If you choose not to enable automatic configuration, you will need to configure at least one tape device later in your recovery. You must configure the tape device after you have finished restoring the operating system and before you begin restoring any other information. You may also need to correct the device configuration for the system console and respond to SRC A900 2000. (step 10 on page 11-14). The instructions to recover from SRC A900 2000 are provided.

__ **Step 3** Type your choices and press the Enter key.

__ **Step 4** If you specified `Y` for the the *Define or change system at IPL* prompt in step 4 on page 11-9, continue with "Task 5–Defining or Changing the System at IPL." If you specified `N` for the the *Define or change system at IPL* prompt in step 4 on page 11-9, skip to "Task 6–Completing the IPL" on page 11-13.

Task 5–Defining or Changing the System at IPL

__ **Step 1** If you specified `Y` for *Enable automatic configuration* on the Set Major System Options display, skip to step 3. If you specified `N`, continue with step 2.

__ **Step 2** If you have chosen not to enable automatic configuration, you must change the QIPLTYPE system value. Do the following:

- __ **Step a.** From the Define or Change the System at IPL menu, select option 3 (System value commands). Press the Enter key.
- __ **Step b.** Select option 3 (Work with system values) and press the Enter key.
- __ **Step c.** Type a `2` in the *Option* column next to the system value QIPLTYPE and press the Enter key.
- __ **Step d.** Change the value to `2` and press the Enter key.
- __ **Step e.** Press F12 until you return to the Define or Change the System at IPL menu.

__ **Step 3** If you are restoring from the distribution tapes, continue with step 4 on page 11-12.

If the primary language on your system is not English, continue with step 4 on page 11-12.

If you are restoring to a different system or to an upgraded system from your SAVSYS tapes, skip to step 5.

If you are restoring to the same system from your SAVSYS tapes, skip to step 6 on page 11-13.

__ **Step 4** When you restore the system from the distribution tapes or when you restore to a different system from SAVSYS tapes, the system resets some system information, such as system values and network attributes, to the IBM-supplied defaults.

Use whatever documentation you have to set the system values to the correct settings for your installation:

__ **Step a.** From the Define or Change the System at IPL menu, select option 3 (System value commands) and press the Enter key.

__ **Step b.** Select option 3 (Work with system values) and press the Enter key.

__ **Step c.** Type a 2 in the *Option* column next to the system values that you want to change and press the Enter key. If the primary language on your system is not English, you may need to reset these language-sensitive system values:

QCCSID	Default system code character set
QCHRID	Default system code page
QCNTRYID	Country identifier
QCURSYM	Currency symbol
QDATFMT	Date editing format
QDECFMT	Decimal data editing format
QKBDTYPE	Default workstation keyboard type
QIGCCDEFNT	Double-byte coded font name
QLANGID	Language identifier
QLEAPADJ	Leap year adjustment
QTIMESEP	Time separator

__ **Step d.** Change the values to the correct values and press the Enter key.

__ **Step e.** Press F12 to return to the Define or Change the System

Note: Some system values cannot be changed at this time. You will need to change these values later in the recovery process.

__ **Step 5** If you are restoring to a different system with a different serial number, the following network attributes are reset to the shipped values:

- System name
- Local network ID
- Local control point name
- Default local location name
- Default node
- Default type
- Maximum number of intermediate sessions
- Route addition resistance
- Network node servers
- Alter primary focal point
- Alert default focal point

If you are restoring from distribution tapes and have previously changed the network attributes from the IBM-supplied defaults, you need to reset them. Do the following:

__ **Step a.** From the Define or Change the System at IPL menu, select option 4 (Network attributes commands) and press the Enter key.

__ **Step b.** Select option 2 (Change network attributes). Press the Enter key to display a list of network attributes.

__ **Step c.** Change the values to the correct network attributes and press the Enter key.

__ **Step d.** Press F12 (Cancel) to return to the Define or Change the System at IPL menu.

__ **Step 6** If you are partially restoring (only some libraries), continue with step 7. Otherwise, skip to step 8.

__ **Step 7** If you are partially restoring, you need to make sure that all libraries specified in the QSYSLIBL and QUSRLIBL system values are on the system. Do the following:

__ **Step a.** From the Define or Change the System at IPL menu, select option 3 (System value commands). Press the Enter key.

__ **Step b.** Select option 3 (Work with system values) and press the Enter key.

__ **Step c.** Type a 2 in the *Option* column next to the system values you want to change and press the Enter key.

__ **Step d.** Change the values to the correct values and press the Enter key.

__ **Step e.** Press F12 to return to the Define or Change the System at IPL menu.

__ **Step 8** Continue with "Task 6–Completing the IPL."

Task 6–Completing the IPL

__ **Step 1** Press F3 to continue the IPL.

__ **Step 2** The following display is shown during the IPL process (attended mode) when system access paths are marked for rebuild:

```
                    Edit Rebuild of Access Paths                RCHAS331
                                                          05/12/90  13:49:34

IPL threshold . . . . . . . . . . . . . 50   0-99

Type sequence, press Enter.
Sequence:  1-99, *OPN, *HLD

                    ------------Access Paths----------  Unique  Rebuild
Seq   Status        File        Library     Member      Keyed   Time
25__  IPL           QAPZSYM2    QSYS        QAPZSYM2    NO      00:00:01
```

"Task 2–Using the Edit Rebuild of Access Paths Display" on page 12-3 describes how to interpret and update this display.

A status message is sent to notify the user that the system is performing access path recovery.

__ **Step 3** Make any changes and press the Enter key. If you have made changes, the Edit Rebuild of Access Paths display is shown again confirming your changes or showing error messages. Repeat this step until the Display Access Path Status display is shown or the IPL continues.

__ **Step 4** The Display Access Path Status display is updated every 5 seconds while the system is rebuilding access paths:

```
                    Display Access Path Status

IPL Threshold . . . . . . . : 50

          ----------Access Paths----------   Rebuild     Current
Status    File        Library    Member      Build Time  Run Time
RUN       QAPZSYM2    QSYS       QAPZSYM2    00:00:01    00:00:01
JRN       QAPZREQ2    QSYS       QAPZREQ2    00:00:01
SYS       QASULE03    QSYS       QASULE03    00:00:01
IPL       QASULE01    QSYS       QASULE01    00:00:01
```

If you want to make changes, press F12 (Cancel) to return to the Edit Rebuild of Access Paths display. If all access paths are rebuilt or you no longer want to see the display, press F3 (Exit and continue IPL).

__ **Step 5** The following display is shown if referential constraints need to be verified:

```
                    Edit Check Pending Constraints                RCHASLJF
                                                          03/30/94  10:09:27
Type sequence, press Enter.
Sequence:  1-99, *HLD

                    ----------Constraints----------  Verify    Elapsed
Seq   Status        Cst       File        Library     Time      Time

75__  AFTIPL      CSTF1     FILE567890  LIB4567890  00:00:56  00:00:00
```

"Task 3–Using the Edit Check Pending Constraints Display" on page 12-4 describes how to interpret and update this display.

__ **Step 6** Make any changes and press the Enter key. If you have made changes, the Edit Check Pending Constraints display is shown again confirming your changes or showing error messages. Repeat this step until the Display Constraint Status display is shown or the IPL continues.

__ **Step 7** The Display Constraint Status display is updated every 5 seconds while the system is verifying constraints:

```
                    Display Constraint Status

IPL Threshold . . . . . . . : 50

          ----------Constraints----------   Verify      Elapsed
Status    Constraint  File       Library     Time        Time
RUN       CUST1       CUSTMAST   CUSTLIB     00:00:04    00:00:01
RUN       CUST2       CUSTMAST   CUSTLIB     00:00:05    00:00:01
IPL       ORDHST1     ORDHIST    ORDLIB      00:00:23    00:00:00
```

If you want to make changes, press F12 (Cancel) to return to the Edit Check Pending Constraints display. If all constraints are verified or you no longer want to see the display, press F3 (Exit and continue IPL).

__ **Step 8** If QSYSOPR messages are displayed, press the Enter key.

__ **Step 9** Press the Enter key to continue. If you restore the operating system from distribution tapes, you may have a problem with sending messages or creating documents if you have OfficeVision/400. To prevent errors, enter the following command:

```
MRGMSGF QOFC/QZOFCMSG QSYS/QOFCMSG
```

__ **Step 10** You may receive A900 2000 on the control panel or message CPF0975, `Console did not vary on`, on the console display. This occurs if your system configuration was lost and you have disabled automatic configuration. The system has created device description QCONSOLE to allow you to continue the restore operation. You may also receive SRC A900 2000 if you perform an IPL when the QIPLTYPE system value is set to `2`. Do not

create a user-defined device description for the console display. This can cause unpredictable results.

If you receive this message, perform the steps described in "Recovering from SRC A900 2000" before continuing.

__ **Step 11** If you restored from the distribution tapes using a 1/4-inch cartridge tape drive, the light on the tape drive may still be on. After the system has finished restoring the operating system, you may remove the tape while the light is on.

Stop!

When the Sign On display appears, you have completed restoring the operating system. Consult your recovery checklist for the next step in your recovery process.

Recovering from SRC A900 2000

When you restore the operating system, you may see SRC A900 2000. This happens if function code 24 is used to restore the Licensed Internal Code and automatic configuration is not active while you are restoring the operating system. Before you can continue your recovery operations, you must create a tape description and possibly a controller description to finish the restore operation. Do not create a user-defined device description for the console display.

If your tape unit is a 3422, 3430, 3480, or a 3490, do the following:

__ **Step 1** Use the Work with Hardware Resource (WRKHDWRSC) command to determine the location of the tape controller.

```
WRKHDWRSC TYPE(*STG)
```

__ **Step 2** Locate the resource name for the tape controller on the Work with Storage Resources display. The values 2604, 2622, or 2644 are displayed in the *Type* column.

__ **Step 3** Type a 9 (Work with) in the *OPT* column next to name and press the Enter key. The Work with Storage Controller Resources display is shown, with the tape controller and the attached tape units.

__ **Step 4** Locate the resource for the tape controller (for example, TAPCTL01).

__ **Step 5** Type a 5 (Work with controller descriptions) in the *Opt* column next to the name and press the Enter key.

__ **Step 6** On the Work with Controller Descriptions display, type a 1 in the *OPT* column next to the blank location. Type the name in the *Description* field and press the Enter key. You are shown the Create Controller Description display.

__ **Step 7** Press the Enter key to accept the values on the display. You are shown the Work with Controller Description display. The new controller description should appear on the display.

__ **Step 8** Type a 9 (Work with) in the *OPT* column next to the controller description that you created. You are shown the Associated Description display. The tape units that have a description of *NONE do not have tape descriptions.

__ **Step 9** Type a 1 to create a device description for each tape unit you need for your recovery.

__ **Step 10** Press F12 to return to the Work with Controller Description display.

__ **Step 11** Type an 8 (Work with configuration status) in the *OPT* column next to the controller. You are shown the Work with Configuration Status display.

__ **Step 12** Find the controller description and type a 1 in the *Opt* column next to the name. Press the Enter key. This varies on the controller and any tape units attached to the controller.

If you are not using a 34xx tape unit, do the following:

__ **Step 1** Use the Work with Hardware Resource (WRKHDWRSC) command to determine tape controller name.

```
WRKHDWRSC TYPE(*STG)
```

__ **Step 2** Locate the tape controller.

__ **Step 3** Type a 9 (Work with) next to tape controller name and press the Enter key. You are shown the Work with Storage Controller Resources display with the tape controller and the attached tape units.

__ **Step 4** Locate the resource name for the tape unit (for example, TAP01).

__ **Step 5** Type a 5 (Work with configuration descriptions) in the *OPT* column next to the tape resource. You are shown the Work with Configuration Descriptions display.

__ **Step 6** Type a 1 (Create) in the *OPT* column next to each tape unit you need to use for the recovery.

__ **Step 7** Type an 8 (Work with configuration status) in the *OPT* column next to the tape unit. You are shown the Work with Configuration Status display.

__ **Step 8** Find the tape device description and type a 1 in the *Opt* column next to the name. Press the Enter key. This varies on the tape unit attached to the controller.

SRC A900 2000 remains displayed on the control panel throughout the remaining restore operations. When the final IPL of the system is complete, SRC A900 2000 disappears. The user-defined device description for the console display will be restored when the Restore Configuration (RSTCFG) command is run later in the recovery.

Stop!

When the Sign On display appears, you have completed restoring the operating system. Consult your recovery checklist for the next step in your recovery process.

```
                          Display Object Authority
Object . . . . . :   PRICES          Owner . . . . .
  Library  . . . . :     CONTRACTS     Primary group  .
Object type  . . . . :   *FILE
Object secured by authorization list  . . . . . .
                          Object
User        Group       Authority
OWNCP                   *ALL
DPTSM                   *CHANGE
DPTMG                   *CHANGE
WILSONJ                 *CHANGE
*PUBLIC                 *USE
```

Notice that WILSONJ still has *CHANGE authority. The authority from the save media (*USE) is granted to WILSONJ, but the authority WILSONJ already has is not revoked. *USE authority is added to *CHANGE authority, so WILSONJ has *CHANGE authority.

Notice also that *PUBLIC authority is not affected by this process. Public authority is stored with the object and is handled when the object is restored. If public authority on the system is different from public authority on the save media, the public authority on the system is used.

Authority is restored to the object with the same name in the same library. In some cases, this could result in restoring authority to a different object.

Assume that you delete program PGMA in library CUSTLIB. You create a new program with the same name but different function. If you restore authority, users who were authorized to the original PGMA are now authorized to the new PGMA. See "How the System Restores Programs" on page 15-18 for more information.

How to Restore Configuration Objects

You can restore:

- All configuration objects
- A group of configuration objects by generic name
- Only specific types of configuration objects, such as line descriptions or connection lists.
- System resource management information

A configuration object must be varied off before you can restore it.

Table 15-4. How Configuration Objects Are Restored

Possible Method	Restricted State?
RSTCFG command [1]	No
Restore menu option 7	No
Restore menu option 21	Yes
Restore menu option 22	Yes
Restore menu option 23	Yes

1 You must have *ALLOBJ special authority to specify ALWOBJDIF(*ALL)

Do This to Restore All Configuration Objects

__ **Step 1** Find the most recent tape that has your configuration. It may be a SAVSYS tape or a SAVCFG tape. The file on the tape is called QFILEIOC.

__ **Step 2** If you are using a SAVSYS tape, type:

```
RSTCFG OBJ(*ALL) DEV(TAP01) OBJTYPE(*ALL)
   ENDOPT(*LEAVE)
```

If you are using a SAVCFG tape, type:

```
RSTCFG OBJ(*ALL) DEV(TAP01) OBJTYPE(*ALL)
   ENDOPT(*UNLOAD)
```

Restoring to a Different System?

You must specify ALWOBJDIF(*ALL) when you restore the configuration to a different system.

The restoring of configuration objects to a different system whose configuration objects exist overlays the existing configuration. In some cases, the configuration description may not match the hardware on the system.

Do not restore system resource management objects to another system. This causes problems that can be fixed only by a service representative. When you use the RSTCFG command to another system, specify SRM(*NONE).

Correcting Problems with the System Resource Management Database

The system resource management (SRM) database provides a link between the hardware on your system and the software descriptions of that hardware (the configuration). When you restore your configuration to a different system, you should not restore the SRM database because it will not match the hardware on the target system. Sometimes during a system upgrade, you are instructed to restore the SRM database to your system even though some of your hardware has changed.

If you have restored the SRM database and the hardware configuration does not match, use the following procedure to correct the SRM database:

__ **Step 1** Type `WRKHDWRSC TYPE(*CMN)` and press the Enter key. You are shown the Work with Communications Resources display.

__ **Step 2** Press F11 (Display resource addresses/statuses).

__ **Step 3** For any resource that has a status of *Not detected*, type a 4 (Remove) in the Option column. Do this only if the hardware is not physically on the system. You may need to check with your hardware service representative to determine this.

__ **Step 4** Repeat steps 1 through 3 for resource type *LWS. You will see the Work with Local Work Station Resources display.

__ **Step 5** Type `WRKHDWRSC TYPE(*STG)` and press the Enter key. You are shown the Work with Storage Resources display.

__ **Step 6** For any resource that has a status of *Not detected*, type a 4 (Remove) in the Option column. Do this only if the hardware is not physically on the system. You may need to check with your hardware service representative to determine this.

__ **Step 7** Repeat steps 5 and 6 for resource type *CSA and for resource type *PRC. You will see the displays for those resource types. If you do not have a particular resource type defined on your system, you receive a message on the display.

Note: For resource type *PRC, do not delete the resource CEC01, even if its status is *Not detected*.

Recovering Devices That Will Not Vary On

If you have a problem with your devices, such as not being able to vary on a device, it may be because the system resource management (SRM) database that was restored does not match the device descriptions on the system.

To correct the problem for a tape unit or a tape controller, do the following:

__ **Step 1** Type `WRKHDWRSC TYPE(*STG)`. You are shown the Work with Storage Resources display.

__ **Step 2** Type a 9 (Work with resource) in the *Opt* column next to the resource name that would not vary on. The Work with Storage Controller Resources display is shown.

__ **Step 3** Write down the valid resource name for the device type and model that you tried to vary on.

__ **Step 4** Press F12 (Cancel) until you return to a display with a command line.

__ **Step 5** If the problem is with a tape unit, other than a 3422, 3430, 3480, or 3490, skip to step 8.

__ **Step 6** Type `WRKCTLD CTLD(`*`controller-name`*`)`. You are shown the Work with Controller Descriptions display.

__ **Step 7** Type 2 (Change) in the *Opt* column next to the controller that would not vary on and press the Enter key. The Change Controller Description display is shown. Skip to step 10.

__ **Step 8** Type `WRKDEVD DEVD(`*`device-name`*`)`. The Work with Device Descriptions display is shown.

__ **Step 9** Type 2 (Change) in the *Opt* column next to the device description that you want to change and press the Enter key. The Change Device Description display is shown.

__ **Step 10** Change the name in the *Resource name* prompt to the correct name for the resource and press the Enter key. You return to the Work with Device Descriptions display or the Work with Controller Descriptions display.

__ **Step 11** Type 8 (Work with status) in the *Opt* column next to the device or controller that you changed and press the Enter key. The Work with Configuration Status display is shown.

__ **Step 12** Type 1 (Vary on) in the *Opt* column next to the device description name or the controller description name. Press the Enter key to vary it on.

Local Workstation Controller: To correct the problem for a workstation, do the following:

__ **Step 1** Type the following and press the Enter key to display the Work with Local Workstation Resources display.

```
WRKHDWRSC TYPE(*LWS)
```

__ **Step 2** Find the correct controller description for the device that would not vary on.

__ **Step 3** Type a 5 (Work with configuration description) in the *Opt* column next to the controller description name and press the Enter key. The Work with Configuration Description display is shown.

__ **Step 4** Type a 5 (Display) in the *Opt* column to display the valid resource name for the workstation controller.

__ **Step 5** Press F12 (Cancel) until you return to a display with a command line.

__ **Step 6** Type the following and press the Enter key to display the device description for the device that would not vary on.

```
WRKCTLD CTLD(controller-name)
```

The Work with Controller Descriptions display is shown.

__ **Step 7** Type a 2 (Change) in the *Opt* column next to the controller description that you want to change and press the Enter key. The

Change Controller Description display is shown.

__ **Step 8** Change the name in the *Resource name* prompt to the correct name for the resource and press the Enter key. You will return to the Work with Controller Descriptions display.

__ **Step 9** Type an 8 (Work with status) in the *Opt* column next to the controller description that you changed and press the Enter key. The Work with Configuration Status display is shown.

__ **Step 10** Type a 1 (Vary on) in the *Opt* column next to the controller description name and press the Enter key to vary on the device.

Note: It is possible that another device description is varied on for this resource. Vary off the device first and then vary on the changed device description. This situation can happen to the console device.

Recovering When You Change the Console Type

When you restore your information to a different system or an upgraded system, you may have a different console type on the target system. After you have restored user information, you need to create a new controller and device description. Do the following:

__ **Step 1** Type `WRKHDWRSC *LWS` and press the Enter key. You are shown the Work with Local Work Station Resources display.

__ **Step 2** Type a 5 (Work with controller descriptions) in the *Opt* column next to the name of the first workstation controller. Press the Enter key. You are shown the Work with Controller Descriptions display.

Note: The first workstation controller may not be CTL01.

__ **Step 3** Type a 1 in the *Opt* column and press the Enter key. You are shown the Create Controller Description display.

__ **Step 4** For the *New controller description* prompt, type the name that you want for the console. Press the Enter key.

Note: If you want to use the name that you had on your old system, you must first delete the device configuration name and then re-create it.

__ **Step 5** Use the CRTDEVDSP command to create a device description for the console.

Recovering the System/36 Environment Configuration

If you are experiencing a problem with the System/36 environment after restoring the system, it may be caused by the locking rules used during the installation process. The QS36ENV configuration object in library #LIBRARY may have been locked by the System/36 environment.

This object contains the System/36 environment names for the workstation, printer, tape and diskette units on the system, and default System/36 environment values used for all users. This object may have been modified by the Change S/36 Environment Configuration (CHGS36) command to customize the System/36 environment.

When the first subsystem is started on the system after the installation process is complete, a new #LIBRARY and a new QS36ENV object in #LIBRARY are created with the AS/400 system defaults. In addition to creating the new objects, each subsystem holds a lock on the QS36ENV configuration object to ensure that it is not deleted. This lock will not allow the saved QS36ENV configuration object to be restored.

If the QS36ENV configuration object did not restore, start with step 1. If the configuration object did restore but you are experiencing problems with the System/36 environment configuration, go to step 5.

__ **Step 1** Rename the newly created #LIBRARY to something else (for example, #LIBNEW).

The locks held on the QS36ENV object remain with the renamed library. This allows the saved System/36 environment configuration object to be restored.

__ **Step 2** Restore the saved copy of library #LIBRARY: `RSTLIB SAVLIB(#LIBRARY)`

__ **Step 3** Perform an IPL of the system.

The QS36ENV object in the restored copy of #LIBRARY is the System/36 environment configuration again.

__ **Step 4** Delete the earlier renamed version of #LIBRARY (for example, #LIBNEW).

__ **Step 5** Use the Change S/36 Environment Configuration (CHGS36) command to refresh the configuration object.

a. Select each of the device types that you want to change.

- Workstation devices
- Printer devices
- Tape devices
- Diskette devices

b. For each device type that you want to change:

1) Press the F5 key to ensure the configuration object matches the device descriptions on the system.
2) If any System/36 names are not specified, do one of the following:
   - Press the F10 key to use the AS/400 defaults for the System/36 names for those devices.
   - Update the System/36 names manually.

c. Save the changes to the configuration object.

See the topic on configuring the System/36 environment in the *Concepts and Programmer's Guide for the System/36 Environment* for more information about configuring the System/36 environment.

How to Restore Libraries

Restoring entire libraries is a common way to recover user information. You can use the Restore Library (RSTLIB) command to restore a single saved library or a group of libraries. You cannot restore a QDOCnnnn (Document) library using the RSTLIB command. Use the Restore Document Library Object (RSTDLO) command to restore documents. You cannot restore the QSYS (System) library using the RSTLIB command. Use the procedure for restoring the operating system.

You can use the RSTLIB command to restore libraries in these groups:

***NONSYS** All libraries that were saved with SAVLIB LIB(*NONSYS) command, including the IBM-supplied libraries QGPL, QUSRSYS, and licensed program libraries.

***ALLUSR** All user libraries that were saved with SAVLIB LIB(*ALLUSR) or SAVLIB LIB(*NONSYS).

***IBM** All IBM-supplied libraries that were saved with SAVLIB LIB(*IBM) or SAVLIB(*NONSYS). Only IBM-supplied libraries that contain IBM objects are restored.

Figure 8-1 on page 8-1 shows which libraries are saved and restored in these groups.

When you restore a group of libraries (*ALLUSR, *NONSYS, or *IBM), you can omit up to 300 libraries using the OMITLIB parameter. The libraries you omit are not restored from the save tapes or diskettes.

Attention!

If you have related objects, such as physical and logical files or journals and journaled files, in different libraries, you must ensure that you restore them in the correct sequence. Read "Sequence for Restoring Related Objects" on page 8-3.

If you are restoring to a different system, specify ALWOBJDIF(*ALL) when you are restoring libraries.

The RSTLIB command restores the entire library, including the library description, object descriptions (only descriptions are restored for logical files, job queues, message queues, output queues, user queues, and data queues), and the contents of other objects. This command also restores status information for programming temporary fixes (PTFs) that were in the library at the time the library was saved.

When you use the RSTLIB command, you can use the OPTION parameter to specify which objects in a library are restored:

Possible Values for the OPTION Parameter of the RSTLIB Command:

***ALL**	Old objects are replaced and new objects are added to a library. *ALL is the default.
***OLD**	Only old objects that already exist on the system are replaced in a library.
***NEW**	Only objects not found on the system are added to a library. The old objects are not replaced.
***FREE**	Only those objects that have their storage freed on the system are restored.

Do This to Restore All Libraries from a Single Save Operation: Following is the procedure for restoring all libraries that were saved with a single command or menu option.

__ **Step 1** Sign on with a user profile that has *SAVSYS special authority. Using *SAVSYS special authority ensures you will not have authority problems during the restore procedure and improves restore performance.

__ **Step 2** Ensure the system is in a restricted state. For more information, see "Putting Your System in a Restricted State" on page 8-3.

__ **Step 3** Find your most recent save tapes.

__ **Step 4** Use Table 15-5 on page 15-9 to determine which special value to use for the RSTLIB command. Type your choice and press F4 (prompt).

Table 15-5. Methods for Restoring All Libraries–Single Save Operation

How Your Libraries Were Saved	Type This to Restore Them
Save Menu option 21	`RSTLIB SAVLIB(*NONSYS)`
SAVLIB LIB(*NONSYS)	`RSTLIB SAVLIB(*NONSYS)`

__ **Step 5** Fill in your choices for other parameters, such as tape device and whether to rewind the tape. Press the Enter key.

__ **Step 6** If you receive messages to load tapes, load the correct tapes and respond to the messages.

__ **Step 7** When the restore operation completes, check your job log to see which libraries were restored and whether any objects were not restored.

Do This to Restore All Libraries from Multiple Save Operations: Following is the procedure for restoring all libraries if they were saved with multiple menu options or commands. Adapt the examples to fit your own save procedures and recovery situation. Before restoring multiple libraries, make sure you read about "Sequence for Restoring Related Objects" on page 8-3.

__ **Step 1** Sign on with a user profile that has *SAVSYS special authority.

__ **Step 2** Ensure the system is in a restricted state.

__ **Step 3** Find your most recent save tapes.

__ **Step 4** Use Table 15-6 to determine which special value to use for the RSTLIB command. If the table shows more than one command, repeat this step and step 5 for each command. Type your choice and press F4 (prompt).

Table 15-6. Methods for Restoring All Libraries–Multiple Save Operations

How Your Libraries Were Saved	Type This to Restore Them
Save Menu options 22 and 23	`RSTLIB SAVLIB(*IBM)` `RSTLIB SAVLIB(*ALLUSR)`
Save Menu options 21 and 23	`RSTLIB SAVLIB(*IBM)` `RSTLIB SAVLIB(*ALLUSR)`

`SAVLIB *NONSYS` followed by `SAVLIB LIB(LIBA LIBB LIBC)`	`RSTLIB SAVLIB(*NONSYS)`
	`  OMITLIB(LIBA LIBB LIBC)`
	`RSTLIB LIB(LIBA)`
	`RSTLIB LIB(LIBB)`
	`RSTLIB LIB(LIBC)`

__ **Step 5** Fill in your choices for other parameters, such as tape device and whether to rewind the tape. Press the Enter key.

__ **Step 6** If you receive messages to load tapes, load the correct tapes and respond to the messages.

__ **Step 7** When the restore operation completes, check your job log to see which libraries were restored and whether any objects were not restored.

How to Restore Objects

You can use the Restore Object (RSTOBJ) command to restore individual objects or an entire library. When you restore a library using the RSTOBJ command, the library description is not restored. Objects can be restored to only one library with the RSTOBJ command.

Warning!

Do not use RSTOBJ to restore licensed programs to library QSYS. Unpredictable results can occur.

How to Restore Database Files

You can restore one or more database files or one or more members of database files by using the RSTOBJ command. Figure 15-1 shows, conceptually, how a database file with two members looks to the system. It has multiple parts:

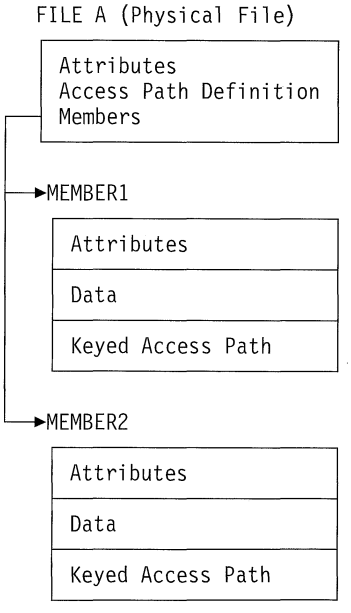

Figure 15-1. Example of a Database File with Two Members

If FILEA exists on the system and you restore it, the system restores the data and access paths for FILEA's two members. The attributes for the file and its members are not changed on the system.

If you want to restore the file attributes as they existed at the time of the save operation, delete the file, then restore it. If you want to restore the member attributes, remove the member (RMVM) and then restore it, specifying MBROPT(*NEW).

When you restore a database file, the system uses information stored with the file and the parameters you specify to make decisions. The topics that follow describe special considerations when restoring database files and members.

Unique File Identification: You can restore a file only to itself. A saved version and a copied version of the same file are not the same and cannot be used interchangeably in a restore operation. Figure 15-2 illustrates this:

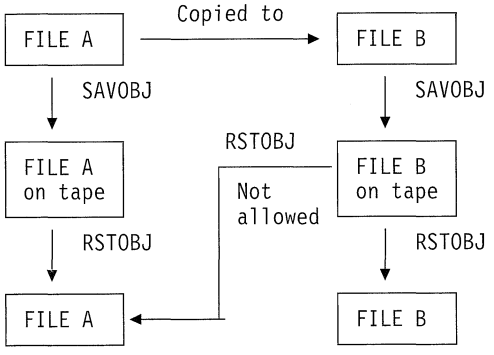

Figure 15-2. Restoring a Copy of a File

File Locking during Restore Operation: When you restore a file, no member of the file can be used during the restore operation, even through logical files. The file is exclusively locked during the restore operation.

Comparing File Attributes during a Restore Operation

When you restore a database file or member that exists on the system, the system expects the creation dates for the system copy and the media copy to be the same. If they are not the same, the system cannot ensure that the contents of the saved copy match the format of the copy on the system.

If you specify ALWOBJDIF(*NONE) on the restore command, the system does not restore the file or member if the creation dates do not match. A message is sent to the user to indicate the file or member could not be restored from the media. ALWOBJDIF(*NONE) is the default.

The creation dates on the system and media might be different because:

- A file or member was deleted and created again after the save operation.
- The file or member on the media was created on another system, but it has the same name as an existing file or member.

If you really want to restore a file or member whose creation date differs from the system version, you have two choices:

- Delete the file or member from the system. Then restore.
- Specify ALWOBJDIF(*ALL) on the restore command. However, this can cause problems. You should be aware of what the system does when you specify ALWOBJDIF(*ALL).

How the System Restores Database Files with ALWOBJDIF(*ALL): Figure 15-3 shows what the system does when creation dates for a database file are different on the system and media copies:

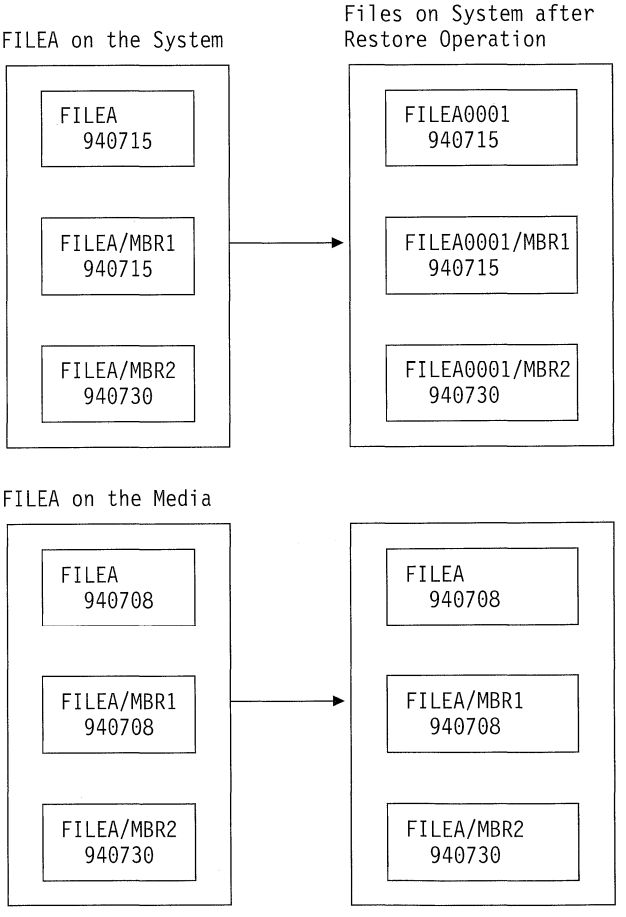

Figure 15-3. Restoring Database Files with Different Creation Dates

The file on the system is renamed. The media version is restored. A message is sent to the user.

Figure 15-4 on page 15-11 shows what the system does when the creation date for one of the members in the file is different:

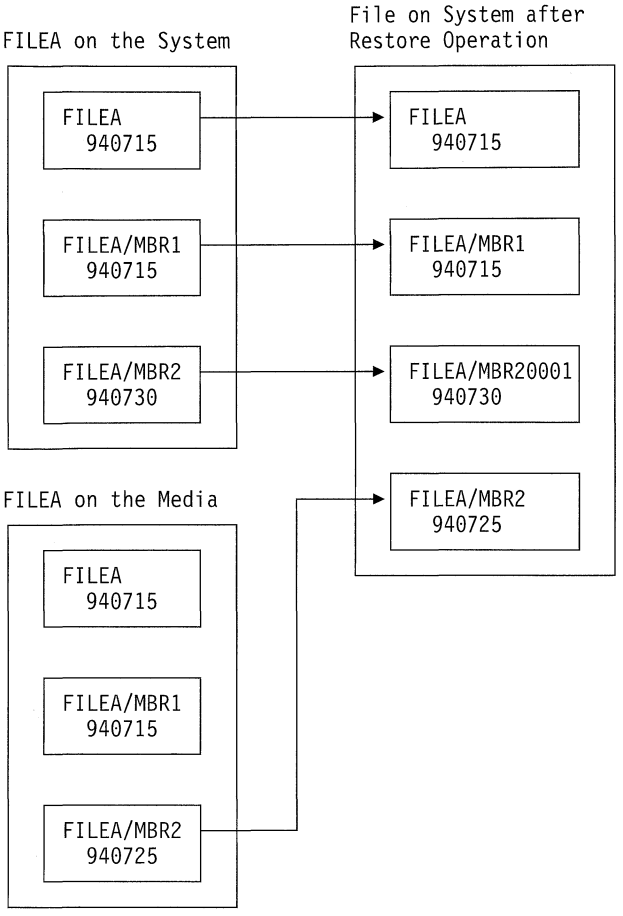

Figure 15-4. Restoring Database Files with Different Creation Dates

The member on the system is renamed. All members from the media are restored. A message is sent to the user.

When you specify ALWOBJDIF(*ALL) and additional members are created during a restore operation, the system ignores the MAXMBRS (maximum members) parameter for the file. After the restore operation, you may have more than the allowed members in the file.

If a logical file is associated with a file or member that is renamed, the logical file is still associated with the renamed file or member, not the restored member.

In both examples, specifying ALWOBJDIF(*ALL) can result in duplicate information, additional files, and additional members. Your system becomes cluttered and your applications may produce unexpected results. If you specify ALWOBJDIF(*ALL), carefully check the messages you receive and analyze your files and members after the restore operation.

Notes:

1. The ALWOBJDIF parameter also affects object ownership. This is described in "How the System Establishes Ownership for Restored Objects" on page 15-3.
2. When you specify MBROPT(*MATCH) on a restore command, you cannot specify ALWOBJDIF(*ALL). See "How the System Matches File Members during a Restore Operation."

How the System Matches File Members during a Restore Operation

When you are restoring to an existing database file, you use the member option (MRBOPT) parameter on either the RSTOBJ command or the RSTLIB command to tell the system what to do if the members do not match. The choices are:

***MATCH** If the set of members on the save media and on the database are not identical, the restore operation fails. *MATCH is the default.

***ALL** All members on the save media are restored, whether or not they exist on the system copy.

***NEW** Only those members on the save media that do not exist in the database file are restored.

***OLD** Only those members on the save media that already exist in the database file are restored.

Note: The ALWOBJDIF parameter determines what the system does if creation dates on the members do not match. See "Comparing File Attributes during a Restore Operation" on page 15-10.

How to Restore Members to a File

You can restore a list of members for a database file using the FILEMBR parameter of the RSTOBJ command. This list may consist of specifically named members, generically named members, or a combination of both specifically and generically named members.

The FILEMBR parameter is used to specify:

- A list of file members (specific or generic) for a specific database file
- The same group of members from more than one file

The default value *ALL causes all file members of files specified with the OBJ parameter to be restored.

Restrictions on the File Member Parameter: The following restrictions apply to the FILEMBR parameter:

- Each database file specified in the FILEMBR parameter must also be specified in the OBJ parameter by its complete name, a generic name, or *ALL.
- Generic names are not valid for the database file name.
- Generic names are valid for the member name.

If a generic file member name is used, and the file does not have members that fit the generic name, the file is not restored. If all files specified by the FILEMBR parameter are not restored, a diagnostic message is sent and the restore operation ends with an escape message giving the number of files not restored.

If a name that is not generic is used, the specific members must exist in the file for any part of the file to be restored.

- The OBJTYPE must be *ALL or include *FILE.
- The MBROPT parameter must not have the *MATCH value.

How to Restore Logical Files

When you restore a logical file, the system uses the description for the logical file to establish its relationship with the based-on physical files and logical files. All based-on files must exist before you can restore the logical file.

You can restore a logical file to a library different than the library for the associated physical file. However, the associated physical file must remain in or be restored to its original library location.

If you try to restore a logical file to a library in which it does not exist, the restore operation fails if any of the associated physical files have had their storage freed.

When a logical file is restored, it must be dependent on the same physical files as it was when it was saved.

- The logical file is created over the physical files in the library where they are being restored if any of the following occur:
  - The logical file and the associated physical files existed in the same library at the time of the save operation.
  - The logical file and the associated physical files are present in the library where the files are being restored.
  - The logical file and the associated physical files are being restored to the same library.
- If the files are not present in the restore library, then the logical files are created over the physical files in the original saved library.
- If the correct physical files are not found in either library, then the restore operation of the logical file fails. To correct the problem, run the RSTOBJ command again and specify OBJ(*NEW). If the restore operation is successful, an informational message (CPF3291) is sent to indicate which library was used for associated physical files.

The creation dates of the physical files must not have changed since the logical file was saved. If the date has changed, an informational message (CPF3293) is sent indicating that the physical file has been changed since the save operation, but the restore operation continues.

Restore physical or logical files with dependent logical files before the dependent logical files, unless the physical and logical files already exist on the system. The following considerations apply to restoring logical files:

- If the dependent physical or logical files are in the same library, the system provides the proper sequencing.
- If the files are in different libraries, you must restore the libraries in order, so that the physical or logical files that have logical files built on them are restored first.
- If the depended-on physical or logical files are not restored before you attempt to restore the logical files, restoring the logical files fails.
- This sequencing also applies to other requirements between files, such as shared formats. You can restore those logical files that failed by using the RSTOBJ command.

How the System Restores Access Paths

The description for a database file contains a description of its access path, if it has one. When you save a database file, you may save the access path with the file. This depends on the type of file, the type of access path, and how you performed the save operation. See "How to Save Access Paths" on page 5-5.

When you restore a file, the system either restores the access path with the file or rebuilds the access path based on the information in the file description. The process of rebuilding the access path for a large database file can take a long time. This topic describes when the system restores access paths and when it cannot. If possible, you should plan your save operations to avoid having to rebuild access paths during a restore operation.

The system always restores the access path for a keyed physical file of type *DATA unless the access path was not saved. The access path for a keyed physical file is always saved, unless the access path is not valid at the time of the save.

Normally, source physical files are not keyed. The default for the CRTSRCPF is to create a non-keyed file. When you restore a keyed source physical file, the access path is rebuilt after the restore operation.

Access paths owned by logical files are restored if **all** of the following conditions are true:

- The access path was saved. Although this seems obvious, access paths are saved only if certain conditions are met. See "How to Save Access Paths" on page 5-5.
- All based-on physical files are in the same library and are being restored at the same time on the same restore command.

- If the logical file exists on the system, it does not specify MAINT(*REBLD).
- The logical file owned the access path at the time it was saved.
- If the logical file is created again by the restore operation and it shares an access path that already exists, the key length for the access path must be equal to the maximum key length of the logical file or you receive an error.

If you meet these conditions, you minimize the rebuilding of access paths. However, during the restore operation, the system checks the integrity of each access path. If it detects any discrepancy, the access path is rebuilt.

In a few cases, the system may decide to rebuild access paths even though they were saved. For example, you may have defined a new logical file that specified the same key as the physical file but also specified UNIQUE. The based-on physical file was in use at the time that the logical file was created. Therefore, the system had to create a new access path for the logical file. Assume you save these two files with a single command. If you restore them with a single command, the system will determine that they can share a single access path. Instead of restoring the two access paths, it builds a new, shared access path for the two files.

Restoring a File Network–Examples: Figure 15-5 shows a physical file and two logical files:

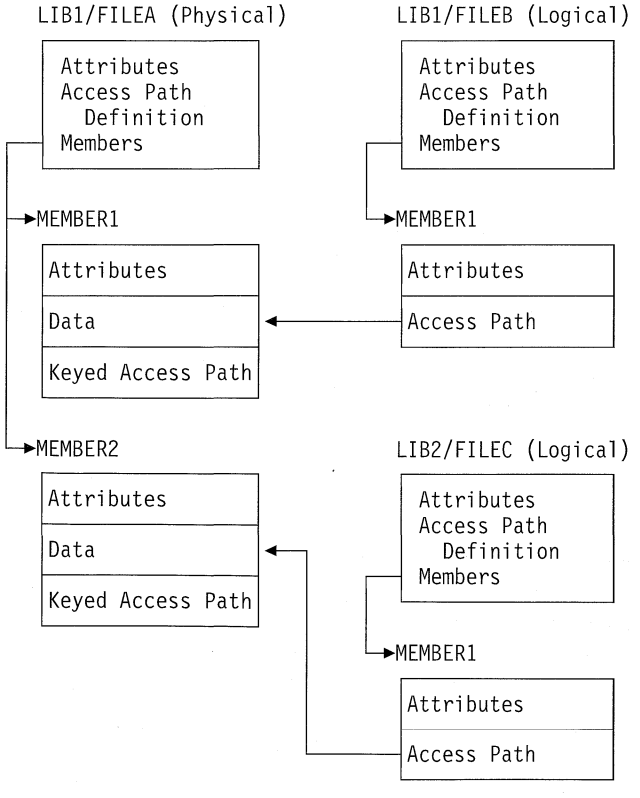

Figure 15-5. Restoring Access Paths

Assume these files were saved with this command:

```
SAVLIB LIB(LIB1 LIB2) ACCPTH(*YES)
```

The save tape contains all three files (FILEA, FILEB, and FILEC) and three access paths, each owned by a different file. Table 15-7 shows what the system does when you restore these libraries using different methods. These examples assume that none of the files are on the system when they are restored:

Table 15-7. Restoring a File Network

Sequence of Restore Commands	What the System Does
Example 1: 1. `RSTLIB SAVLIB(LIB1)` 2. `RSTLIB SAVLIB(LIB2)`	Results of Example 1: 1. FILEA and FILEB are restored. The access paths owned by FILEA and FILEB are restored. 2. FILEC is restored. The access path owned by FILEC is rebuilt.
Example 2: 1. `RSTLIB SAVLIB(LIB2)` 2. `RSTLIB SAVLIB(LIB1)`	Results of Example 2. 1. FILEC is not restored because FILEA is not on the system. 2. FILEA and FILEB are restored. The access paths owned by FILEA and FILEB are restored.

These examples highlight the problems that can occur when logical files and based-on physical files are in different libraries. Access paths are restored when physical files are restored because they are built over data contained in the physical file. In the first example, FILEC owned the access path but FILEC was not on the system when the physical file was restored. Therefore, the access path was not restored. In the second example, FILEC could not be restored because its based-on physical file (FILEA) was not on the system.

How to Prevent the System from Rebuilding a Large Access Path: If the situation shown in Table 15-7 occurs on your system and you want to prevent the system from rebuilding a large access path, do the following:

__ **Step 1** Restore the physical file or the library containing the physical file first. In the case of example 2, restore FILEA or LIB1.

__ **Step 2** Restore the logical file (FILEC) using the RSTOBJ command.

__ **Step 3** Immediately after restoring the logical file, type `EDTRBDAP`. You are shown the Edit Rebuild of Access Paths display.

__ **Step 4** Change the value in the *Seq* column for the logical file to *HLD.

__ **Step 5** Restore the physical file (FILEA) again using the RSTOBJ command. Because the logical file (FILEC) is now on the system, the system will restore the access path owned by FILEC.

__ **Step 6** Type `EDTRBDAP`. You are shown the Edit Rebuild of Access Paths display.

__ **Step 7** Change the sequence number for FILEC to a value from 1 through 99 to remove the access path from the display.

How the System Restores Files with Shared Formats

When a database file is restored and that file, before it was saved, had shared the record format of another file, an attempt is made to find the file whose format was shared, and reestablish the original format sharing.

The search for restoring the shared format starts in the library to which the restored file is directed and continues in the library from which the restored file was saved. Following are the results of the search:

- If the sharing file is found and has not been changed (level check) since the save, then no new format is created for the restored file.
- If the sharing file is not found, or it is found but fails the level check, then a new format for the restored file is created with the same definition as the one it initially shared.
- If a format sharing file has been renamed, deleted, or moved to a library other than the save or restore library, a new format is created for the dependent file when the dependent file is restored.

How the System Restores Files with Referential Constraints

Information about DB2/400* database files is kept in system cross-reference files. This includes information about constraints that are defined. When you define a referential constraint, you specify that a record with a certain primary key must exist in the parent file before a record with the same values in a foreign key can exist in the dependent file. For example, you cannot add an order to the order file (dependent file) unless a record exists for the customer in the customer file (parent file).

A referential constraint is defined, stored, and saved with the dependent file. Each referential constraint has a name, which must be unique for the library that contains the dependent file. When you restore a file that has a referential constraint name that already exists in the library, the system generates a new name for the referential constraint that is being restored.

When you restore a database file that already exists on the system, the referential constraints defined for the system copy of the file are used. If the saved version of the file has additional referential constraints that are not on the system copy, these additional constraints are not restored.

When you restore a database file that does not exist, you should ensure that any referential constraints that were not on the saved copy are reestablished. Otherwise, you lose the data integrity checking that was on your system before a failure occurred.

Files that are related by referential constraints form a database network similar to the network formed by logical files and the based-on physical files. You should try to save an entire referential constraint network in one operation. If this is not possible, you should at least save the files with consecutive operations where no activity occurs in between. This ensures that the files are synchronized.

If you journal database files, you should journal all physical files that are part of a referential constraint network. This ensures that your referential constraints remain valid after you have applied journaled changes. The chapter of the *Backup and Recovery – Advanced* book called "Planning and Setting Up Journaling" provides more information about journaling and referential constraints.

Referential Constraint Network–Example:

Figure 15-6 shows an example of a referential constraint network.

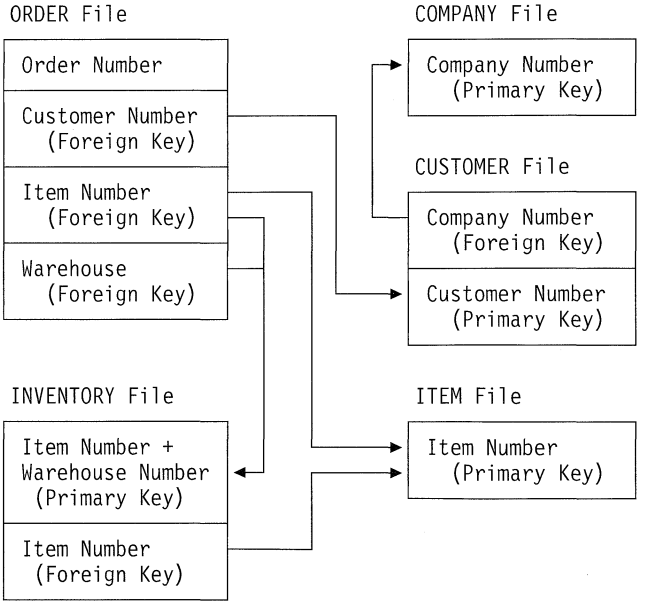

Figure 15-6. Restoring a Referential Constraint Network

You can restore the files in this network in any sequence. When you restore the files, the system reestablishes the relationships and attempts to determine whether the constraints are still valid.

For example, if you restore both the ITEM file and the INVENTORY file, the system checks the internal information stored with the files to determine whether the indexes for the two files are synchronized.

If the internal information does not match, the system validates the constraint for the INVENTORY file. It does this by reading every record in the INVENTORY file and ensuring that a record with that item number exists in the ITEM file. If this process is successful, the constraint is valid. If this process is not successful, the status of the constraint is set to **Check pending**. When the status of a constraint is check pending, you must take action to correct the situation, either by restoring one of the files or using a program to update the files.

If you restore one of the files, the system again attempts to validate the constraint. If you use a program to update the information, you must use the Edit Check Pending (EDTCPCST) command to force the system to revalidate the constraint. The topic "Task 3–Using the Edit Check Pending Constraints Display" on page 12-4 describes how to determine the status of files that have referential constraints.

The *DB2/400 Database Programming* book has more information about using referential constraints.

How the System Restores Files with Triggers

You can define one or more trigger programs for a file. When a certain event occurs in the file, the system calls the trigger program. When you save a file that has trigger programs, you are saving only the definitions of the trigger programs, not the programs themselves. You must ensure that the programs are also saved, perhaps by placing them in the library with the file.

When you restore a database file that already exists, the system does not restore any trigger program definitions from the save media. When you restore a database file that does not exist, you should ensure that any definitions for trigger programs that were not on the saved copy are reestablished. Otherwise, you lose the data integrity checking that was on your system before a failure occurred.

The system does not stop restoring a database file if its trigger programs cannot be found. Therefore, you must ensure that files and trigger programs are saved and restored correctly. Otherwise, the system may not perform some of the actions that your applications expect.

Table 15-8 shows examples of actions the system takes when you restore the physical file FILEA and the trigger program PGMA:

Table 15-8. Restoring Files That Have Trigger Programs

Save Procedure That Is Used	Restore Procedure That Is Used	How the Trigger Program Is Defined after the Restore Operation
FILEA is saved from LIBX. PGMA is saved from LIBX. The trigger is defined as LIBX/PGMA.	PGMA is restored to LIBY. FILEA is restored to LIBX.	The trigger is defined as LIBX/PGMA. When an event occurs that causes this trigger, the program will not be found.
FILEA is saved from LIBX. PGMA is saved from LIBX. The trigger is defined as LIBX/PGMA.	PGMA is restored to LIBY. FILEA is restored to LIBY.	The trigger is defined as LIBY/PGMA.
FILEA is saved from LIBX. PGMA is saved from LIBY. The trigger is defined as LIBY/PGMA.	PGMA is restored to LIBZ. FILEA is restored to LIBZ.	The trigger is defined as LIBX/PGMA. When an event occurs that causes this trigger, the program will not be found.

The *DB2/400 Database Programming* book provides more information about using trigger programs. The chapter of the *Backup and Recovery – Advanced* book called "Planning and Setting Up Journaling" describes special considerations when you journal database files that have triggers defined. You must make special provisions to ensure the integrity of your data because trigger programs are not called when you apply journaled changes.

How to Restore Files That Are Journaled

If the journal exists on the system before the files are restored, all files that were saved while being journaled (or saved while having their access paths journaled) are journaled again provided one of the following is true:

- The files are not on the system at restore time.
- The files are on the system and journaling was not ended for the files.

When you restore a file that was being journaled at the time of the save operation, an entry is written to the journal to indicate that it was restored.

When you restore access paths that were being journaled at the time of the save operation, no journal entry is written to the journal to indicate that it was restored.

If the journal is not on the system at the time a journaled file is being restored, the restore operation for the file causes a warning message to be sent and journaling is not resumed. This warning message causes a diagnostic message to be sent at the end of the restore operation. (See the topic "How

to Verify That Objects Are Restored Successfully" on page 8-6.)

What Happens When You Restore Journaled Files to a Different Library: The system assigns a unique internal journal identifier (JID) to every object that is journaled. If you restore a journaled file to a library other than the original library, and the file still exists on the system and continues to be journaled to the same journal, the JID of the restored file is changed. No message is sent telling the user that the JID of the restored file is changed.

All the journal entries associated with the media copy of the file have the original JID. You cannot apply these journal entries to the file that was restored to a different library because it has a different JID. For this reason, you should avoid restoring a journaled file to a different library.

For example, in Figure 15-7, the original file FILEA in LIBX library has an internal journal identifier of Z that is recorded with every journal entry associated with FILEA in LIBX. When FILEA is restored from the media to LIBC library, it is assigned the journal identifier of Y because FILEA still exists in LIBX and continues to be journaled.

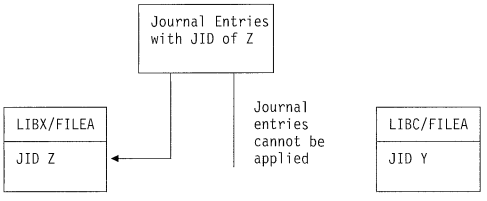

Figure 15-7. Restoring a Journaled File to a Different Library

Any journal operation that references a file by name and involves using journal entries requires that the journal identifier of the file and the journal identifier recorded in the journal entries be the same. Because FILEA in LIBC has journal identifier Y, journal entries with journal identifier Z are not associated with the restored FILEA in LIBC. As a result, journal changes recorded for FILEA in LIBX cannot be applied to FILEA in LIBC. For the same reason, referencing FILEA in LIBC on the Display Journal (DSPJRN), Receive Journal Entry (RCVJRNE), or Retrieve Journal Entry (RTVJRNE) commands does not return entries for FILEA in LIBX.

To display or retrieve the journal entries of the original file:

1. Save and then delete the existing file on the system.
2. Restore the original file to the system.
3. Display or retrieve the journal entries.
4. Delete the original file.
5. Restore the existing file back to the system.

Steps before Deleting a Physical File

In some situations, you must delete a physical file as part of your recovery. For example, the physical file may be damaged. Or a physical file in a user ASP may have overflowed into the system ASP. You cannot delete a physical file if other files are dependent on it, such as logical files or files that share the record format.

Before deleting a physical file, do the following:

__ **Step 1** Use the Display Database Relationships (DSPDBR) command to list all the files that are dependent on the physical file.

__ **Step 2** Save and delete each file that is dependent on the physical file.

After you have recovered the physical file, restore all the dependent files.

How to Restore Journals and Journal Receivers

You can restore journals or journal receivers only to the same library from which they were saved. Use the RSTOBJ and RSTLIB commands to restore journals and journal receivers. When you are restoring multiple objects with one of these commands, journals and journaled files are restored before the journal receivers.

When you use several commands to restore several objects, restore the objects in this order:

1. Journals
2. Based-on physical files associated with those journals
3. Dependent logical files
4. Journal receivers

If you have journal receivers that were created before V3R1, you must restore them in the order of newest to the oldest to establish the receiver chain correctly.

How to Restore Journals

When you restore a journal, the system creates a new journal receiver and attaches it. The characteristics of the new journal receiver are based on the journal receiver that was attached when the journal was saved:

- The system creates a name that is not likely to conflict with other journal receivers that may be on the system. The topic "Naming Journal Receivers" in the *Backup and Recovery – Advanced* book describes how the system generates a name.
- The system attempts to assign the same owner and to create the journal receiver in the same library. If the owner of the receiver is not found, the receiver is assigned to the default owner (QDFTOWN) user profile.

- The system starts a new receiver chain. The chapter of the *Backup and Recovery – Advanced* book called "Working with Journals, Journal Receivers, and Journal Entries" discusses receiver chains.
- If dual receivers were being used when the journal was saved, dual receivers are created and attached to the journal.

You cannot restore a journal to a library containing a journal with the same name because you would overlay the existing journal with old information. If a journal must be restored (because of damage) to a library, the existing journal must be deleted first.

Steps before Deleting a Journal

In some situations, you must delete a journal as part of your recovery. For example, the journal may be damaged. Or a journal in a user ASP may have overflowed into the system ASP. You cannot delete a journal while files are being journaled to it.

You use the Delete Journal (DLTJRN) command to delete a journal. Before deleting a journal, try to do the following steps. You may not be able to perform these steps successfully if the journal is damaged.

__ **Step 1.** Type

```
WRKJRNA JRN(library-name/journal-name)
OUTPUT(*PRINT)
```

and press the Enter key. You receive a listing showing all the physical files and access paths that are currently being journaled.

__ **Step 2.** End journaling for all the access paths assigned to the journal by typing:

```
ENDJRNAP FILE(*ALL)
JRN(library-name/journal-name)
```

__ **Step 3.** End journaling for all the physical files assigned to the journal by typing:

```
ENDJRNPF FILE(*ALL)
JRN(library-name/journal-name)
```

After you restore the journal or create it again, you must start journaling again for each file and access path. You should save the files after you start journaling, in case the system assigned a new journal identifier (JID) to a file.

How to Restore Journal Receivers

If you have journal receivers that were created before V3R1, restore them from newest to oldest to establish the receiver chain correctly. If the journal receivers were created on V3R1 or later, you can restore them in any sequence. If you restore journal receivers in a single command, the system restores them in the correct sequence.

The system will not restore a journal receiver over the journal receiver that is currently attached. The system will not restore a journal receiver over an existing journal receiver that contains more entries. If you use the SAVCHGOBJ command to save journal receivers, this is likely to occur. The journal receiver that is attached at the time of the save operation is a changed object and is saved by the command. When you restore, you receive message CPF3706 and the system continues with the next journal receiver.

If you use a save procedure that saves the currently attached journal receiver, you may encounter the situation of attempting to restore a journal receiver with fewer entries than the journal receiver on the system. For example, assume you save your journal receivers when receiver RCVR0006 is attached. RCVR0006 has 1500 entries. Later, you use the CHGJRN command to create and attach a new receiver. Now receiver RCVR0007 is attached. Receiver RCVR0006 is still on the system and has 4300 entries. If you attempt to restore receiver RCVR0006 from your save tape, the operation fails because the saved copy has only 1500 entries.

If the library you specify on the restore command for a journal receiver does not exist, the system restores the journal receiver to the library that contains the journal. If you specify RSTASP(*SAVASP) and the ASP does not exist, the system usually restores the journal receiver to the same ASP as the library that contains the journal.

Placing Journal Receivers in the Correct Auxiliary Storage Pool: If the attached journal receivers are not in the desired ASP after the restore operation, do the following:

__ **Step 1.** Create a journal receiver in the desired ASP. Follow your existing naming convention and use the same journal receiver attributes.

__ **Step 2.** Use the CHGJRN command to attach the new journal receiver to the journal.

Resolving Name Conflicts When Restoring Journal Receivers: When you restore a journal, the system creates and attaches a new journal receiver. The system attempts to name this journal receiver so that a name conflict does not occur. However, in rare cases, this new journal receiver may have a name that matches the name of a journal receiver that you need to restore. If this occurs, do the following:

__ **Step 1.** Create a new journal receiver with a name separate from your normal naming convention. For example, type: `CRTJRNRCV JRNRCV(library-name/TMP0001.`

__ **Step 2.** Use the CHGJRN command to attach the temporary journal receiver: `CHGJRN JRN(library-name/journal-name) JRNRCV(TMP0001).`

__ **Step 3.** Delete the journal receiver that has the name conflict. This journal receiver should not have any entries you need for your recovery because it was created when the journal was restored.

__ **Step 4.** Restore the journal receivers.

__ **Step 5.** Create a journal receiver that continues your naming convention and has the same journal receiver attributes.

__ **Step 6.** Use the CHGJRN command again to attach the journal receiver that you created in step 5.

Correcting the Journal Receiver Directory: Every journal has a directory of journal receivers. The sequence of journal receivers is called the **receiver chain**. Before you begin a recovery using journal receivers, you should ensure that this receiver directory is current and correct.

Do the following:

__ **Step 1.** Type `WRKJRNA JRN(`*`library-name/journal-name`*`)` and press the Enter key.

__ **Step 2.** From the Work with Journal Attributes display, press F15 (Work with receiver directory). You are shown the Work with Receiver Directory display.

__ **Step 3.** If the receiver directory is not correct, do the following:

__ **Step a.** Type `WRKJRN` and press the Enter key.

__ **Step b.** On the prompt display, enter the name of the journal.

__ **Step c.** On the Work with Journals display, type a `9` (Associate receivers with journal) in the option column in front of the journal. The system establishes the receiver chain for the journal.

Note: If some of the journal receivers were created prior to Version 3 Release 1, you may need to restore all the journal receivers, from newest to oldest, to establish the receiver chain correctly.

Steps before Deleting a Journal Receiver

In some situations, you must delete a journal receiver as part of your recovery. For example, the journal receiver may be damaged. Or a journal receiver in a user ASP may have overflowed into the system ASP.

You cannot delete a journal receiver that is currently attached. You also cannot delete a journal receiver if later journal receivers in the receiver chain are still on the system, unless the receiver to be deleted is damaged.

If you need the journal receiver for recovery, you should not delete it without first saving it. If you do, the system warns you but does not prevent you from deleting the journal receiver.

Before deleting a journal receiver, do the following:

__ **Step 1.** If the journal receiver is attached, detach it by typing:

```
CHGJRN JRN(library-name/journal-name)
   JRNRCV(*GEN)
```

Note: If the current journal receiver is damaged, you cannot specify `JRNRCV(*GEN)`. Use the Create Journal Receiver (CRTJRNRCV) command to create a new journal receiver that follows your naming convention and has the same attributes. Specify that receiver name on the CHGJRN command.

__ **Step 2.** If earlier journal receivers are on the system, save them and delete them. You can print the receiver chain by typing `WRKJRNA JRN(`*`library-name/journal-name`*`) OUTPUT(*PRINT)`.

How the System Restores Programs

Restoring programs to your system represents a security exposure. A restored program may have been altered to perform functions that you do not intend, or the program may adopt the authority of a powerful user profile.

When the QSECURITY (security level) system value on your system is 40 or higher, the system checks for restricted instructions in all programs that are restored. You can also use the QALWOBJRST system value to prevent certain types of objects from being restored to your system. See "Controlling Restoration of Security-Sensitive Objects" on page 8-4.

The system stores a validation value for all programs created on V1R3 of the operating system or later versions. When a program is restored, the system calculates the validation value and compares it to the value on the media. If they are different, the system creates the program again from the program object. The system cannot re-create a program if the program's observability has been removed.

Table 15-9 shows what the system does when restoring programs:

Table 15-9 (Page 1 of 2). System Actions When Restoring Programs

Situation Description	Audit Journal Entry	Message	Owner	Version of Program Restored	Private and Public Authorities
Program created before V1R3; security level less than 40	None	None	Unchanged	Original	Unchanged
Program created before V1R3; security level 40 or higher; ALWOBJDIF(*ALL)	None	None	Unchanged	Original	Unchanged

Table 15-9 (Page 2 of 2). System Actions When Restoring Programs

Situation Description	Audit Journal Entry	Message	Owner	Version of Program Restored	Private and Public Authorities
Program created before V1R3; security level 40 or higher; ALWOBJDIF(*NONE); retranslation successful	None	None	Unchanged	Re-created	Unchanged
Program created before V1R3; security level 40 or higher; ALWOBJDIF(*NONE); retranslation not successful	Yes	CPF375B	QDFTOWN	Original	Revoked
Program created on V1R3 or later; validation value is valid	None	None	Unchanged	Original	Unchanged
Program created on V1R3 or later; validation value is not valid, retranslation successful	Yes	CPF375C	Unchanged	Re-created	Unchanged
Program created on V1R3 or later; validation value is not valid; retranslation is not successful; security level less than 40	Yes	CPF375A	Unchanged	Original	Unchanged
Program created on V1R3 or later; validation value is not valid; retranslation is not successful; security level 40 or greater; ALWOBJDIF(*ALL)	Yes	CPF375D	Unchanged	Original	Unchanged
Program created on V1R3 or later; validation value is not valid; retranslation is not successful; security level 40 or greater; ALWOBJDIF(*NONE)	Yes	CPF375B	QDFTOWN	Original	Revoked

The *Security – Reference* book has more information about protecting your system from programs that might circumvent security.

How to Restore Save File Data

If the data in a save file is saved to tape or diskette using the SAVSAVFDTA command, it appears as though the data originally came from tape or diskette when it is restored. You can use the RSTOBJ, RSTLIB, RST, RSTDLO, RSTCFG or RSTUSRPRF commands to restore the data.

If the save file data is saved to tape or diskette using the SAVLIB, SAVOBJ,or SAVCHGOBJ command and SAVFDTA(*YES) was specified on the save command, the save file must be restored before the objects contained in the save file can be restored.

How to Restore Spooled Output Files

You cannot directly save and restore spooled files on an output queue. If you use the technique described in "How to Save Spooled Files" on page 5-7, you can restore the spooled files by first restoring the database files with a restore command, such as Restore Object (RSTOBJ) or Restore Library (RSTLIB), and then copy the database file members to the spooled output files by using the Copy File (CPYF) command and specifying TOFILE(QSYSPRT).

How to Restore Licensed Programs

Use the RSTLICPGM command to add or replace licensed programs on the system. Refer to the *Software Installation* book for more information about installing licensed programs.

How to Restore Documents and Folders

Use the Restore Document Library Object (RSTDLO) command to restore documents, folders, and mail. To use this command most efficiently, you should know how documents were saved. To determine this, use the output that was printed for the SAVDLO procedures or use the DSPTAP command. RSTDLO performance is also better if you have *SAVSYS special authority.

The RSTDLO command provides many options. You can restore:

- By user-specified document name or system object name.
- All the documents and folders you saved by typing: `RSTDLO DLO(*ALL) SAVFLR(*ANY)`. If you saved DLOs from more than one ASP, you must specify `SAVASP(*ANY)`. You must also specify the sequence numbers (SEQNBR parameter) for the files on the tape.

  Note: When you use RSTDLO DLO(*ALL), this includes the folders used by IBM-supplied programs, such as Client Access/400. Ensure that these folders were saved from the current release, or you may need to install the licensed programs again.
- 1 to 300 documents from the same media file by specifying the names of the documents or the system object names.
- 1 to 300 folders from the same media file.
- All filed documents that are not in any folder on the save media.
- A folder by specify `DLO(*ALL) SAVFLR(`*`folder-name`*`)`. See "How to Restore Folders" on page 15-20 for more information.

When you restore documents, you can rename them, restore them to a different folder, or have the system assign new system object names. The folder for a document determines its ASP location. You can move a document to a different ASP by doing the following:

1. Save the document.
2. Delete it with the DLTDLO command.
3. Restore it into a folder in a different ASP.

When you restore documents or folders from a list and specify SEQNBR(*SEARCH), the system restores from the first tape file that contains any of the documents or folders that you specified. If the tape file does not contain all the documents and folders in your list, the system does not search other tape files for the additional documents and folders. You can specify `SEQNBR(starting-sequence ending-sequence)` to search more than one tape file.

When you restore DLOs, the system updates the search index database information for the DLOs. If you receive error messages during the restore procedure because the information in the database does not match the DLOs, run the Reclaim Document Library Object (RCLDLO) command. Then try the restore procedure again.

Note: The message tells you if the RCLDLO procedure is necessary. Use RCLDLO only if you are instructed by a message or by the recovery checklist you are using.

Authority Required to Restore DLOs: If you are restoring DLOs into a folder, you must have authority to the folder. If you are restoring existing DLOs, you must have authority to those DLOs. Certain combinations of the RSTDLO command require additional authority. The *Security – Reference* book provides information about the specific authorities required for the RSTDLO command.

How the System Restores New DLOs: When you restore new DLOs, the system files them. The DLO is treated as new to the system if any of the following is true:

- It has been previously deleted.
- It is being restored to a different system.
- It is being restored with the NEWOBJ(*NEW) parameter.

How the System Restores Existing DLOs: When you are restoring an existing DLO, the system skips the DLO and continues with the next one if either of the following is true:

- The DLO is in use.
- You do not have the necessary authority.

If the existing document is damaged, some of the security information may be lost. The restore operation continues and a message is sent informing you that the document is damaged and some of the security information is lost.

Restrictions for Running Multiple DLO Commands: No two of the following commands may be run on one system at the same time:

SAVDLO
RSTDLO
RCLDLO DLO(*ALL)
RCLDLO DLO(*INT)
DLTDLO DLO(*ALL)
RNMDIRE

An attempt to run these commands at the same time results in the message CPF8A47: `Internal system objects are in use.` The second SAVDLO, RSTDLO, or RCLDLO operation ends with no objects saved, restored, or reclaimed.

Size Limitations When Restoring Document Library Objects: On V2R3 or later, you cannot restore more than 349 000 objects to a single library. Before V2R3, the limit is 250 000 objects from a single library. Because DLOs are nominally stored in libraries, this limit applies to the QDOC library in the system ASP and to the QDOCnnnn libraries in user ASPs.

How to Restore Folders

To restore a folder object, the entire folder (the folder object plus all document and folder objects within it) must also be restored. However, if the specific folder being restored was stored in other folders at the time it was saved, those higher level folders do not have to be restored to restore the specific folder.

When you restore a folder, the fully qualified folder path name you are restoring must exist unless you are restoring a first-level folder. For example, if you save folder A and then delete it, you can enter RSTDLO DLO(*ALL) SAVFLR(A) and restore folder A in addition to all the documents and folders in it. However, if you want to restore folder A/B/C/D, you must create folder A, then folder B in folder A, then folder C in folder A/B, before you can restore folder D in folder C. You only have to create the folders that comprise the A/B/C path, and you do not have to create folder D in folder A/B/C before you can restore it.

If you try to restore a folder that is in use, the system bypasses restoring the folder and all the DLOs in it.

If you try to restore into an existing folder but the folder is damaged and cannot be reclaimed, you receive a message informing you that the folder is damaged and not restored. The folder and all documents and folders in it are not restored.

How to Rename Documents When Restoring

You can use the RENAME parameter to give documents a different name when they are restored. You can also place them in a different folder using the RSTFLR parameter.

If renaming a document when it is restored would result in a duplicate name in a folder, the system does the following:

- If ALWOBJDIF(*NONE) is specified, the document is not restored.
- If ALWOBJDIF(*ALL) is specified, the document is restored and replaces the existing document in the folder.

You can specify more than one value for the RENAME parameter. The system matches the RENAME values with the DLO values until it runs out of values for one or the other. Assume you specify:

```
RSTDLO DLO(A B C D) SAVFLR(X) RENAME(J K L) RSTFLR(Y)
```

After the restore operation, you would have these documents:

Document J in folder Y
Document K in folder Y
Document L in folder Y
Document D in folder Y

How to Restore Mail and Distribution Objects

You can restore mail by specifying `RSTDLO DLO(*MAIL)`. If you specified `SAVDLO DLO(*MAIL)` when you saved, you can specify `RSTDLO DLO(*ALL) SAVFLR(*ANY)` to restore mail.

Specifying RSTDLO DLO(*MAIL) restores only those filed documents that have a mail log reference at the time they are saved, plus all the distribution objects and distribution documents from the save media or online save file. Specifying RSTDLO DLO(*ALL) SAVFLR(*ANY) restores all distribution objects, all documents, and all folders from the save media or online save file.

Distribution documents and objects cannot be restored individually. If you specify any other form of the RSTDLO command, such as RSTDLO DLO(*ALL) SAVFLR(A) and RSTDLO DLO(X) SAVFLR(A/B), then no distribution documents and objects are restored. If the filed documents that are restored using these other forms of the RSTDLO command contain mail log references, then the mail log references are restored if the distribution objects exist on the system.

Mail log references are updated for all existing local recipients of a restored document. Mail log references on remote systems for remote recipients are not restored. If a document being restored still exists in a mail log at the time it is restored, then the contents of the document are restored and the status of the document in the mail log is not changed. If the document being restored has been deleted from a mail log, then the status of the restored document is either *filed* for a filed document or *opened* for a distribution document.

Mail log references are restored for a local sender of a document if there was an entry in the sender's mail log at the time the distributions were saved. Entries in the mail logs of remote senders are not saved or restored.

How the System Restores Descriptive Information for DLOs

The creation date, file date, and revision date for restored documents and folders are set as follows:

- The creation date of the document or folder on the save media is restored with the document or folder.
- When the RSTDLO command replaces a document or folder, the file date of the document or folder being replaced on the system is used.
- The object revision date is set to the current date when the document or folder is restored.
- The content revision date of the document on the save media is restored with the document.
- The content revision date is set to the current date when replacing a folder.
- The content revision date of the folder on the save media is restored with the folder if the folder is new.

How the System Restores Authority and Ownership for DLOs

"How the System Establishes Ownership for Restored Objects" on page 15-3 and "How to Restore Object Authorities" on page 15-4 describe how the system handles ownership and authority when restoring objects. These same rules apply when restoring DLOs, with these additions:

- If the user profile that owns a DLO is not in the system distribution directory, ownership is assigned to the QDFTOWN user profile.
- When you restore a DLO that does not exist on the system, any access codes and explicit users are removed. If you have restored user profiles and you later run the RSTAUT command, the private authorities to the DLO are restored. The access codes are not restored.

When to Run the Rename Directory (RNMDIRE) Command

When you need to run the Rename Directory Entry (RNMDIRE) command for a local user, schedule it just before you perform the following operations:

- Saving mail
- Saving the system distribution directory

If the rename operation is performed just before saving the mail and the directory, the changed information is saved and the information will be the same as what is on the system. If the information on the media does not match the information on the system, the mail will not be restored during the restore operation.

When to Run the Document Library Object (RNMDLO) Command

When you need to run the Rename Document Library Object (RNMDLO) command, schedule it just before you back up document library objects. If the rename operation is performed just before saving the document library object, the changed name is saved and the information on the media will be the same as what is on the system.

If you rename a document library object after a save operation, the document library object name on the system is different than the name on the media. However, the system object names remain the same. The restore operation fails because the system thinks the document library object already exists. Message CPF90A3 or CPF909C is sent indicating that the document or folder already exists.

Do one of the following:

- To create a new document or folder, specify NEWOBJ(*NEW).
- To replace an existing document, specify RENAME(*document-name*), where *document-name* is the name given to the document by the RNMDLO command.
- To replace an existing folder, specify RSTFLR(*folder-name*), where *folder-name* is the name given to the folder by the RNMDLO command.

Output from the RSTDLO Command: You can use the OUTPUT parameter on the RSTDLO command to show information about the restored documents, folders, and mail. You can either print the output (OUTPUT(*PRINT)) or save it to a database file (OUTPUT(*OUTFILE)).

If you print the output, you should be aware of device dependencies:

- The heading information in the output is device-dependent. All information does not appear for all devices.
- The print file for the RSTDLO command uses a character identifier (CHRID) of 697500. If the printer you are using does not support this character identifier, you will receive message CPA3388. To print the RSTDLO output and not receive message CPA3388, specify the following before specifying *PRINT on the RSTDLO command:

  ```
  CHGPRTF FILE(QSYSOPR/QPRSTDLO) CHRID(*DEV)
  ```

  For more information about character identifiers (CHRID), see the *Printer Device Programming* book.

If you use an output file, the system uses the file format QSYS/QAOJRSTO.OJRDLO. The file layout is described in the *Office Services Concepts and Programmer's Guide* book.

Recovery of Text Index Files for Text Search Services

The text index database files are a part of the Text Search Services. The text index recovery process must ensure a consistent, usable set of index files. The text search index contents must be consistent with the document library contents. The last version indexed date for all documents is recorded in both the text index and the individual documents. The dates are used in the recovery process to ensure that the text index and the document library content match.

The text index database files are saved when library QUSRSYS is saved. A list of the files that are saved when library QUSRSYS is saved is shown in a table in the *Office Services Concepts and Programmer's Guide* book.

If you are restoring the text index files, then all of the files must be restored together from the same backup media. If they are not restored from the same media, their association to each other is lost. The loss of the association to each other can cause unpredictable results. If you do not have saved copies of the files, you must delete the files and then restore them from your distribution tapes.

The text index details are kept in the administration table file. Pointers to the current index are stored in the table. The administration table file must be restored with the other files. If you have changed the defaults for the text index details, then before restoring the files, write down the current text index details (if available). To display the text index details, type `WRKTXTIDX` on a command line and press the Enter key. Then select option 5 (Display details) on the Work with Text Index display. You can enter the values again after the table is restored.

If the scheduling queue (file QABBIQTB) is damaged and there are documents on the system, you can restore the scheduling queue and can get back some of the requests that were lost if the saved scheduling queue is a very recent copy. Retaining the requests on the restored scheduling queue may not be a benefit if it is not a recent copy.

If you are recovering all text index search files and documents from the same set of save tapes, you should not have problems. If you are recovering your system in pieces, consult Appendix D, "Procedures for Recovering the Text Index" for possible problems and their solutions.

For more information about Text Search Services, see the *Office Services Concepts and Programmer's Guide*.

How to Restore Objects in Directories

Use the RST (Restore) command to restore objects that you have saved with the SAV command. These commands are most commonly used to save and restore objects in the QLANSrv file system, the QOpenSys file system, and the *Root* file system.

You can use the RST command to restore:

- A specific object
- A directory or subdirectory
- An entire file system
- Objects that meet search criteria
- A list of object path names

You can rename an object or restore it to a different directory by using the new-name element of the object (OBJ) parameter.

The OBJ parameter on the RST command supports the use of wildcard characters and the directory hierarchy. Online information and the *Integrated File System Introduction* book provide more information about how to specify object names when you use integrated file system commands.

Some file systems allow the same physical object to be named different ways, using aliases and links. The topic "How to Save Objects That Have More Than One Name" on page 5-11 shows examples of objects with links and how those objects are saved.

In Figure 15-8, FILEA in the JCHDIR directory and FILEA in the DRHDIR directory are both hard links to the same file. They point to the same object. They can have the same name or different names for the objects.

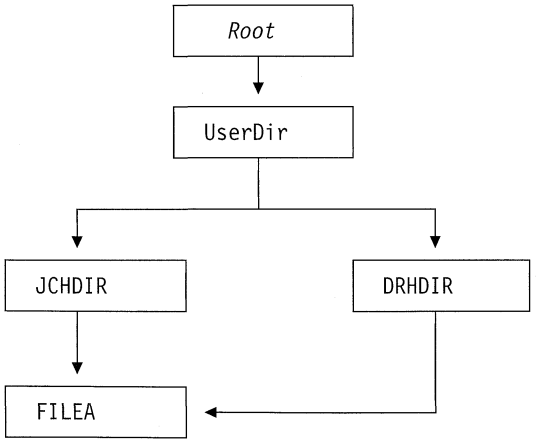

Figure 15-8. An Object with Hard Links–Example

Table 15-10 shows several examples of how these objects are restored. These examples assume that you use this SAV command: `SAV OBJ('/UserDir/*')`. The tape contains FILEA and both hard links pointing to the file.

Table 15-10. Restoring Objects That Have Hard Links

Restore Command Used	Objects That Are on the System before the RST Command	Objects after the RST Command
`RST OBJ('/UserDir/*')`	JCHDIR/FILEA	The saved data is restored. The object DRHDIR/FILEA is created on the system. It points to the same object as JCHDIR/FILEA.
`RST OBJ('/UserDir/DRHDIR/*')`	JCHDIR/FILEA	A new object, DRHDIR/FILEA, is created. The JCHDIR/FILEA that exists on the system is not affected by the restore operation.
`RST OBJ('/UserDir/*')`, or `RST OBJ('/UserDir/JCHDIR/*')`, or `RST OBJ('/UserDir/DRHDIR/*')`	JCHDIR/FILEA, DRHDIR/FILEA	Data from the media copy of FILEA is restored over the system copy because the same name is specified as a name that already exists on the system.

Figure 15-9 shows the symbolic link called `customer` pointing to the CUSTMAS file in the CUSTLIB library.

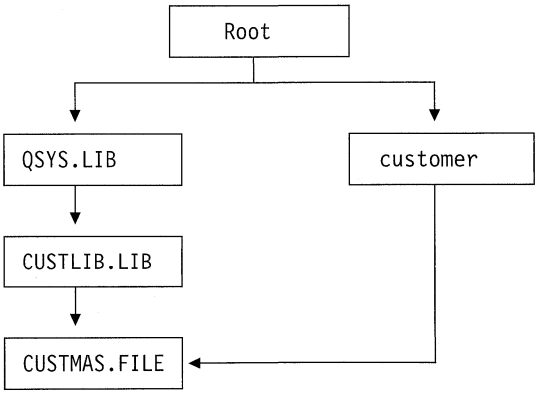

Figure 15-9. An Object with a Symbolic–Example

If you restore the customer object (`RST OBJ('/customer')`), you are restoring only the fact that it points to the CUSTMAS file, not the file itself. If the CUSTMAS file does not exist, the restore operation succeeds. However, if you try to use the customer object, you receive an error message. If you restore the CUSTMAS file or create it again, the symbolic

link between customer and the CUSTMAS file is re-established.

How to Restore LAN Server/400 Information

"How LAN Server/400 Information Is Stored and Saved" on page 5-12 describes the directories used for the LAN Server/400 licensed program and the procedures for saving information from those directories. How you restore LAN Server/400 information depends on how you saved it.

In a complete recovery, you must restore the following:

- The domain controller database if one of the network servers on your system is the domain controller.
- All the directories.
- Authority information.

The *LAN Server/400 Administration* book describes the recovery steps.

Restrictions When Using the Restore Command

The RST command can be used to restore objects to any file system. The topics that follow describe restrictions that apply when using the RST command.

Restrictions When Restoring Objects to Multiple File Systems: When you use the RST command to restore objects to more than one file system at the same time and the file systems include the QSYS.LIB file system or the QDLS file system, the following restrictions apply:

- Different file systems support different types of objects and different methods of naming objects. Therefore, when you restore objects from more than one file system with the same command, you cannot specify object names or object types. You can restore all objects from all file systems, or you can omit some file systems. These combinations are valid:
  - Restoring all objects on the system: `OBJ('/*')`

    Note: Using this command is not the same as using option 21 from the Restore menu. Following are the differences between SAV OBJ('/*') and option 21:

    - RST OBJ('/*') does not put the system in a restricted state.
    - RST OBJ('/*') does not start the controlling subsystem when it finishes.
    - RST OBJ('/*') does not provide prompting to change default options.
  - Restoring all objects in all file systems except the QSYS.LIB file system and the QDLS file system: `OBJ(('/*') ('/QSYS.LIB' *OMIT) ('/QDLS' *OMIT))`
  - Saving all objects in all files systems except the QSYS.LIB file system, the QDLS file system, and one or more other file systems: `OBJ(('/*') ('/QSYS.LIB' *OMIT) ('/QDLS' *OMIT) ('/other values' *OMIT))`
- Values for other parameters of the RST command are supported only for some file systems. You must choose values that are supported by all file systems. Specify the following parameters and values:

OPTION	*ALL
ALWOBJDIF	*NONE or *ALL
LABEL	*SEARCH
OUTPUT	*NONE
SUBTREE	*ALL
SYSTEM	*LCL
DEV	(Must be a tape device)
VOL	*MOUNTED

- When you specify RST OBJ('/*'), the following applies:
  - The system restores only objects saved by SAV OBJ('/*').
  - The system must be in a restricted state.
  - You must have *SAVSYS or *ALLOBJ special authority.
  - You cannot specify diskette or save file for the DEV parameter.

  Note: RST OBJ('/*') is not the recommended method for restoring the entire system. Chapter 9, "Selecting the Right Recovery Strategy" describes how to determine the recovery procedure for your situation.

Restrictions When Restoring Objects to the QSYS.LIB File System: When you use the RST command to restore objects to the QSYS.LIB (library) file system, the following restrictions apply:

- The OBJ parameter must have only one name.
- You specify objects in the same way that you specify them on the RSTOBJ command and the RSTLIB command. Table 15-11 shows the valid options for the Object (OBJ) parameter when restoring objects to the QSYS.LIB file system and the equivalent RSTOBJ or RSTLIB command:

Table 15-11 (Page 1 of 2). Using the RST Command for QSYS.LIB Objects

Object Parameter on RST Command	Equivalent RSTxxx Command
`OBJ('/QSYS.LIB/`*library-name*`.LIB')`	`RSTLIB SAVLIB(`*library-name*`)`
`OBJ('/QSYS.LIB /`*library-name*`.LIB/*')`	`RSTOBJ SAVLIB(`*library-name*`) OBJ(*ALL) OBJTYPE(*ALL)`
`OBJ('/QSYS.LIB/`*library-name*`.LIB /*.`*object-type*`')`	`RSTOBJ SAVLIB(`*library-name*`) OBJ(*ALL) OBJTYPE(`*object-type*`)`
`OBJ('/QSYS.LIB/`*library-name*`.LIB /`*object-name.object-type*`')`	`RSTOBJ SAVLIB(`*library-name*`) OBJ(`*object-name*`) OBJTYPE(`*object-type*`)`

Table 15-11 (Page 2 of 2). Using the RST Command for QSYS.LIB Objects

Object Parameter on RST Command	Equivalent RSTxxx Command
OBJ('/QSYS.LIB/*library-name*.LIB /*file-name*.FILE/*')	RSTOBJ SAVLIB(*library-name*) OBJ(*file-name*) OBJTYPE(*FILE)
OBJ('/QSYS.LIB/*library-name*.LIB /*file-name*.FILE/*.MBR')	RSTOBJ SAVLIB(*library-name*) OBJ(*file-name*) OBJTYPE(*FILE)
OBJ('/QSYS.LIB/*library-name*.LIB /*file-name*.FILE /*member-name*.MBR')	RSTOBJ SAVLIB(*library-name*) OBJ(*file-name*) OBJTYPE(*FILE) FILEMBR((*ALL) (*member-name*))

- You can specify only object types that are allowed on the RSTOBJ command. For example, you cannot use the RST command to restore user profiles because OBJTYPE(*USRPRF) is not allowed on the RSTOBJ command.
- Some libraries in the QSYS.LIB file system cannot be restored with the RSTLIB command because of the type of information they contain. Following are examples:
  - The QDOC library, because it contains documents.
  - The QSYS library, because it contains system objects.

  You cannot use the RST command to restore these entire libraries:

QDOC	QSRV
QDOCnnnn	QSPL
QRECOVERY	QSYS
QRPLOBJ	QTEMP

- You can use the new-name element of the object parameter to rename an object in a directory, restore an object to a different directory, or restore an object to a different library. Table 15-12 shows some examples:

*Table 15-12. *INCLUDE Options on the RST Command–Examples*

Restore Command	Results
RST OBJ(('/DBSDIR/FILEB' *INCLUDE '/DBSDIR/FILEX'))	FILEX is created in the DBSDIR directory. The data that was saved with FILEB is restored to FILEX. If FILEB still exists on the system, it is not changed.
RST OBJ(('/DBSDIR/FILE*' *INCLUDE LMSDIR))	Restores all objects from the DBSDIR whose names begin with FILE to the LMSDIR directory.
RST OBJ(('/QSYS.LIB/LIB1.LIB' *INCLUDE '/QSYS.LIB/LIB2.LIB'))	RSTLIB SAVLIB(LIB1) RSTLIB(LIB2)
RST OBJ(('/QSYS.LIB/LIB1.LIB/* *INCLUDE '/QSYS.LIB/LIB2.LIB'))	RSTOBJ OBJ(*ALL) SAVLIB(LIB1) RSTLIB(LIB2)

*Table 15-12. *INCLUDE Options on the RST Command–Examples*

Restore Command	Results
RST OBJ(('/QSYS.LIB/LIB1.LIB/*.type' *INCLUDE '/QSYS.LIB/LIB2.LIB'))	RSTOBJ OBJ(*ALL) OBJTYPE(*type) SAVLIB(LIB1) RSTLIB(LIB2)

- For database file members, OPTION(*NEW) restores members for new files only.
- Other parameters must have these values:

SUBTREE	*ALL
SYSTEM	*LCL
OUTPUT	*NONE
ALWOBJDIF	*ALL or *NONE

Restrictions When Restoring Objects to the QDLS File System: When you use the RST command to restore objects to the QDLS (document library services) file system, the following restrictions apply:

- The OBJ parameter must have only one name.
- The OBJ and SUBTREE parameters must be one of the following:
  - OBJ('/QDLS/*path/folder-name*') SUBTREE(*ALL)
  - OBJ('/QDLS/*path/document-name*') SUBTREE(*OBJ)
- Other parameters must have these values:

SYSTEM	*LCL
OUTPUT	*NONE
ALWOBJDIF	*ALL or *NONE
OPTION	*ALL

Restoring Program Temporary Fixes

If you have restored the Licensed Internal Code or the operating system, you need to ensure that the PTFs on your system are current. Do the following:

__ **Step 1** Print a list of all the program temporary fixes (PTFs) currently on the system. Type the following and press the Enter key:

```
DSPPTF LICPGM(*ALL) OUTPUT(*PRINT)
```

__ **Step 2** Compare this list of PTFs with the list you printed when you saved the system. If the lists are the same, return to your recovery checklist. If PTFs are missing from the list you printed in step 1, you must apply them. Continue with the next step.

__ **Step 3** Find the most recent cumulative program temporary fix tape. This package could be on a distribution tape or on a stand-alone tape.

Note: If you do not have the PTFs you need, order them and apply them

later. Continue with your recovery checklist.

__ **Step 4** You can use option 8 (Install program temporary fix package) on the Program Temporary Fix menu. All of the PTFs in the cumulative PTF package will be installed for the licensed programs you have installed on your system. Refer to the *AS/400 System PTF Shipping Information Letter* for special instructions that are required.

If you want to restore individual PTFs, see the *System Operation* book for more information about applying individual PTFs.

Index

Special Characters

/QFPNWSSTG directory 5-12
/QLANSrv directory 5-12
***ALLOBJ (all-object) special authority**
restoring 15-3
***ALLUSR (all-users) special value**
list of IBM-supplied libraries 5-1
***IBM (IBM) special value**
list of IBM-supplied libraries 5-1
***JRN (journal) object**
definition 1-1
***JRNRCV (journal receiver) object**
definition 1-1
***NONSYS (non-system) special value**
list of IBM-supplied libraries 5-1
***SRM (system resource management) object**
save methods 3-2

Numerics

2440 Tape Unit
disabling high-speed feature 10-14
enabling high-speed feature 10-14

A

A900 2000 SRC (system reference code)
recovery 11-15
abbreviated install
definition 11-2
abend
See abnormal end
abnormal end
definition 9-1, 12-1
restarting system 12-1
abnormal IPL (initial program load) 12-1
access path
definition 1-2
editing rebuild during IPL 12-3
explicit journaling
overview 1-2
freeing storage 3-8
protection
overview 1-2
recovery times
restoring 11-7
restoring 15-12
saving 5-5
system-managed protection (SMAPP)
overview 1-2
access path recovery time
recovering 15-1
access path recovery time *(continued)*
save methods 3-2
accounting (QACGJRN) journal 3-12
Add All Disk Units to the System display 11-4
addressability
recovering 13-2
adopted authority object
allowing restore operation 8-4
aliases
saving 5-13
all-object (*ALLOBJ) special authority
restoring 15-3
all-user (*ALLUSR) special value
list of IBM-supplied libraries 5-1
allow object restore operation (QALWOBJRST) system value 8-4
allow user domain objects (QALWUSRDMN) system value 8-4
allowing
restore
adopted authority objects 8-4
sensitive objects 8-4
system-state programs 8-4
ALWOBJDIF (allow object difference) parameter
database file 15-10
member 15-10
Application Development Manager
project log (QLYPRJLOG) journal 3-12
transaction log (QLYJRN) journal 3-12
Apply Journaled Changes (APYJRNCHG) command
broken receiver chain 16-6
unbroken receiver chain 16-5
applying
journaled changes
broken receiver chain 16-6
determining whether to 16-3
QAOSDIAJRN journal 16-6
unbroken receiver chain 16-5
APYJRNCHG (Apply Journaled Changes) command
broken receiver chain 16-6
unbroken receiver chain 16-5
ASP (auxiliary storage pool)
benefits 1-3
definition 1-2, 9-1
overview 1-2
system
removing failed unit 9-26
types 1-3
audit (QAUDJRN) journal 3-12
creating during restore 8-6
authority
LAN Server/400
saving 5-13

© Copyright IBM Corp. 1995

authority *(continued)*
owner
saving 5-7
primary group
saving 5-7
private
saving 5-7
public
saving 5-7
required
SAVDLO (save document library object) command 5-8
restoring 15-4
saving entire system 4-2, 4-4
authority holder
restoring 15-3
saving 5-7
authorization list
linkage
saving 5-7
restoring 15-3
save methods 3-2
saving 5-7
automatic configuration
enabling
during recovery 11-10, 11-11
automatic recovery
media error 3-7
auxiliary storage (ASP)
high percentage used 12-7
auxiliary storage pool (ASP)
benefits 1-3
definition 1-2, 9-1
overview 1-2
system
removing failed unit 9-26
types 1-3
availability
benefits 2-6
choosing options 2-5
continuous 2-6
costs 2-6
high 2-6
introduction 1-1
using dual systems 1-4
Availability Support Center 1-6

B

backup
choosing media 3-5
introduction 1-1
options with Operational Assistant 6-2
schedule with Operational Assistant 6-3
using Operational Assistant 6-1
backup lists 6-1
backup strategy
complex 2-5
disk failure 2-1
failure types 2-1
how often to save 2-2
human error 2-2
journaling 2-4
medium 2-3
non-disk failure 2-2
power failure 2-2
program failure 2-2
save-while-active function 2-5
saving changed objects 2-4
saving groups of libraries 2-4
simple 2-3
site loss 2-2
system failure 2-2
system loss 2-2
testing 2-5
what to save 2-2
why needed 2-1
battery power unit
available models 1-4
overview 1-4
broken receiver chain
applying journaled changes 16-6

C

calendar server (QCALSRV) subsystem
ending 8-3
change period (CHGPERIOD) parameter 5-11
change timestamp
object description 5-3
changed object
restoring
by library 16-2
by object 16-2
cumulative 16-2
directories 16-8
not cumulative 16-2
saving 5-11
directories 5-11
examples 5-3
new library 5-3
OBJJRN (journaled object) parameter 5-3
Operational Assistant backup 6-3
SAVFDTA (save file data) parameter 5-6
updating history 3-10
with journaling 5-3
changes
summary of xiii
changing system
at IPL
during recovery 11-11

Check Save (CHKSAV) command 3-10
Check Save Restore (CHKSAVRST) command 3-10
checksum
recovery steps 9-25
checksum protection
overview 1-3
CHGPERIOD (change period) parameter 5-11
CHKSAV (Check Save) command 3-10
CHKSAVRST (Check Save Restore) command 3-10
cleaning
tape units 3-7
CLEAR (clear) parameter 3-7
clearing
job queue
during recovery 11-7
output queue
during recovery 11-7
Client Access/400
saving 5-8
command, CL
Apply Journaled Changes (APYJRNCHG)
broken receiver chain 16-6
unbroken receiver chain 16-5
APYJRNCHG (Apply Journaled Changes)
broken receiver chain 16-6
unbroken receiver chain 16-5
Display Database Relations (DSPDBR) 15-16
DSPDBR (Display Database Relations) 15-16
Edit Check Pending Constraint (EDTCPCST) 12-5
EDTCPCST (Edit Check Pending Constraint) 12-5
End Subsystem (ENDSBS)
QCALSRV (calendar server) subsystem 8-3
QSYSWRK (subsystem monitor) subsystem 8-3
restricted state 8-3
using 8-3
ENDSBS (End Subsystem)
QCALSRV (calendar server) subsystem 8-3
QSYSWRK (subsystem monitor) subsystem 8-3
restricted state 8-3
using 8-3
Print Error Log (PRTERRLOG)
tapes 3-7
PRTERRLOG (Print Error Log)
tapes 3-7
QRYDOCLIB (Query Document Library) 13-17
Query Document Library (QRYDOCLIB) 13-17
RCLDLO (Reclaim Document Library Object) 15-20
RCLSTG (Reclaim Storage)
duplicate names in QRCL 8-4
object ownership 8-4
procedure 8-3, 13-3
QALWUSRDMN (allow user domain objects) system value 8-4
recovering user ASP 13-3
user domain object 8-4
what system does 8-3
why to run 12-7
command, CL *(continued)*
Reclaim Document Library Object (RCLDLO) 15-20
Reclaim Storage (RCLSTG)
duplicate names in QRCL 8-4
object ownership 8-4
procedure 8-3, 13-3
QALWUSRDMN (allow user domain objects) system value 8-4
recovering user ASP 13-3
user domain object 8-4
what system does 8-3
why to run 12-7
Rename Directory Entry (RNMDIRE)
restoring mail 15-21
Rename Document Library Object (RNMDLO)
restoring documents 15-22
Restore (RST)
changed objects 16-8
how to use 15-23
Restore (RST) command
restrictions 15-24
restrictions when restoring documents 15-25
Restore Authority (RSTAUT) 15-4
Restore Configuration (RSTCFG) 15-5
Restore Document Library Object (RSTDLO)
maximum number of DLOs 15-20
media error 8-8
output 15-22
overview 15-19
renaming document 15-20
restoring authority 15-21
restoring descriptive information 15-21
restoring ownership 15-21
user ASP 13-16
Restore Library (RSTLIB)
*ALLUSR libraries 15-8
*IBM libraries 15-8
*NONSYS libraries 15-8
media error 8-7
OPTION parameter 15-8
overview 15-8
user ASP 13-16
Restore Licensed Program (RSTLICPGM) 15-19
Restore Object (RSTOBJ) 15-9
Restore User Profiles (RSTUSRPRF) 15-1
RNMDIRE (Rename Directory Entry)
restoring mail 15-21
RNMDLO (Rename Document Library Object)
restoring documents 15-22
RST (Restore)
changed objects 16-8
how to use 15-23
RST (Restore) command
restrictions 15-24
restrictions when restoring documents 15-25
RSTAUT (Restore Authority) 15-4

command, CL *(continued)*
RSTCFG (Restore Configuration) 15-5
RSTDLO (Restore Document Library Object)
maximum number of DLOs 15-20
media error 8-8
output 15-22
overview 15-19
renaming document 15-20
restoring authority 15-21
restoring descriptive information 15-21
restoring ownership 15-21
user ASP 13-16
RSTLIB (Restore Library)
*ALLUSR libraries 15-8
*IBM libraries 15-8
*NONSYS libraries 15-8
media error 8-7
OPTION parameter 15-8
overview 15-8
user ASP 13-16
RSTLICPGM (Restore Licensed Program) 15-19
RSTOBJ (Restore Object) 15-9
RSTUSRPRF (Restore User Profiles) 15-1
SAV (Save)
changed objects 5-11
CHGPERIOD (change period) parameter 5-11
examples 5-13
how to use 5-10
objects that have not changed 5-12
output 5-14
restrictions 5-14, 5-15
using 5-10
SAVCFG (Save Configuration)
updating history 3-10
using 5-6
using QSAVCFG data area 3-10
SAVCHGOBJ (Save Changed Object)
examples 5-3
new library 5-3
OBJJRN (journaled object) parameter 5-3
SAVFDTA (save file data) parameter 5-6
updating history 3-10
using 5-2
with journaling 5-3
SAVDLO (Save Document Library Object)
authority required 5-8
maximum number of DLOs 3-9
output 5-9
saving changed DLOs 5-8
saving mail 5-10
updating history 3-10
using 5-8
using QSAVDLOALL data area 3-10
Save (SAV)
changed objects 5-11
CHGPERIOD (change period) parameter 5-11
examples 5-13

command, CL *(continued)*
Save (SAV) *(continued)*
how to use 5-10
objects that have not changed 5-12
output 5-14
restrictions 5-14, 5-15
using 5-10
Save Changed Object (SAVCHGOBJ)
examples 5-3
new library 5-3
OBJJRN (journaled object) parameter 5-3
SAVFDTA (save file data) parameter 5-6
updating history 3-10
using 5-2
with journaling 5-3
Save Configuration (SAVCFG)
updating history 3-10
using 5-6
using QSAVCFG data area 3-10
Save Document Library Object (SAVDLO)
authority required 5-8
maximum number of DLOs 3-9
output 5-9
saving changed DLOs 5-8
saving mail 5-10
updating history 3-10
using 5-8
using QSAVDLOALL data area 3-10
Save Library (SAVLIB)
*ALLUSR (all-users) special value 5-1
*IBM (IBM) special value 5-1
*NONSYS (non-system) special value 5-1
determining what command was used 17-2
media error 3-11
SAVFDTA (save file data) parameter 5-6
updating history 3-10
using 5-1
using QSAVALLUSR data area 3-10
using QSAVIBM data area 3-10
using QSAVLIBALL data area 3-10
Save Licensed Program (SAVLICPGM) 5-7
Save Object (SAVOBJ)
SAVFDTA (save file data) parameter 5-6
using 5-2
Save Save File Data (SAVSAVFDTA) 5-6
Save Security Data (SAVSECDTA)
updating history 3-10
using QSAVUSRPRF data area 3-10
Save Storage (SAVSTG)
considerations 7-1
overview 7-1
resuming 7-6
updating history 3-10
using 7-2
using QSAVSTG data area 3-10
Save System (SAVSYS)
saving configuration 5-6

command, CL *(continued)*
Save System (SAVSYS) *(continued)*
using QSAVCFG data area 3-10
using QSAVSYS data area 3-10
using QSAVUSRPRF data area 3-10
SAVLIB (Save Library)
*ALLUSR (all-users) special value 5-1
*IBM (IBM) special value 5-1
*NONSYS (non-system) special value 5-1
determining what command was used 17-2
media error 3-11
SAVFDTA (save file data) parameter 5-6
updating history 3-10
using 5-1
using QSAVALLUSR data area 3-10
using QSAVIBM data area 3-10
using QSAVLIBALL data area 3-10
SAVLICPGM (Save Licensed Program) 5-7
SAVOBJ (Save Object)
SAVFDTA (save file data) parameter 5-6
updating history 3-10
using 5-2
SAVSAVFDTA (Save Save File Data) 5-6
SAVSECDTA (Save Security Data)
updating history 3-10
using QSAVUSRPRF data area 3-10
SAVSTG (Save Storage)
considerations 7-1
overview 7-1
resuming 7-6
updating history 3-10
using 7-2
using QSAVSTG data area 3-10
SAVSYS (Save System)
saving configuration 5-6
using QSAVCFG data area 3-10
using QSAVSYS data area 3-10
using QSAVUSRPRF data area 3-10
Start Update of Index (STRUPDIDX) 5-10
STRUPDIDX (Start Update of Index) 5-10
Vary Configuration (VRYCFG)
File Server I/O Processor 5-14
VRYCFG (Vary Configuration)
File Server I/O Processor 5-14
command, QUSRTOOL
Check Save (CHKSAV) 3-10
Check Save Restore (CHKSAVRST) 3-10
CHKSAV (Check Save) 3-10
CHKSAVRST (Check Save Restore) 3-10
Display Overflowed Objects (DSPOVFOBJ) 13-10
DSPOVFOBJ (Display Overflowed Objects) 13-10
Print Save Status (PRTSAVSTS) 3-11
PRTSAVSTS (Print Save Status) 3-11
commitment control
overview 1-2
complete restore
recovery procedure 9-27
complex save strategy 2-5
configuration
restoring 15-5
problems with SRM database 15-5
saving 5-6
procedure 5-6
updating history 3-10
using QSAVCFG data area 3-10
configuration list
recovering 15-1
configuration object
restoring to a different system 15-5
save methods 3-2
Confirm Delete ASP Data display 13-21
Confirm Install of the Operating System display 11-3
Confirm Language Feature Selection display 11-4
Confirm Remove of Units display 13-23
console
problem
during recovery 11-15
console type
changing during restore 15-7
constraint
pending
editing during IPL 12-4
continuous availability
definition 2-6
continuous operations
definition 2-6
country identifier (QCNTRYID) system value
resetting during recovery 11-12
CPA3388 message 5-9, 15-22
CPF0975 message
during recovery 11-15
CPF7088 message 8-6
CPF8113 message 12-7
CPI0953 message 13-10
CPI0954 message 13-10
creation date
database file
restoring 15-10
currency symbol (QCURSYM) system value
resetting during recovery 11-12

D

damaged
database file 8-4
disk configuration 11-5
document
restoring 15-20
folder
restoring into 15-20
IBM-supplied user profile 12-6

damaged *(continued)*
job description 12-6
job queue 12-6
journal 12-7
journal receiver 12-8
journaled file 12-8
object 12-8
without library 8-4, 12-7
operating system object 12-6
output queue 12-7
QAOSS (text index) database files 12-7
damaged object
recovery 12-6
save operation
recovering 3-11
DASD failure
overview 2-1
pump 9-2
recovery strategy 9-2
recovery with checksum 9-25
recovery with device parity protection 9-24
recovery with mirrored protection 9-23
DASD migration 1-6
data
restoring save file 15-19
data compaction
overview 3-12
data compression
overview 3-12
data queue
saving 5-2
database
restoring
referential constraints 15-14
trigger program 15-15
database file
constraint
editing during IPL 12-4
damaged 8-4, 12-7
deleting 15-16
freeing storage 3-8
journaled
damaged 12-8
not synchronized 12-8
saving 5-3, 5-4
member
damaged 12-7
multiple members
example 15-9
QAOSS (text index)
damaged 12-7
renaming
during restore 15-10
restoring
access paths 15-12
ALWOBJDIF (allow object difference) parameter 15-10
database file *(continued)*
restoring *(continued)*
considerations 15-9
creation date 15-10
different member set 15-11
files being journaled 15-15
MAXMBRS (maximum members) parameter 15-11
MBROPT (member option) parameter 15-11
member locking 15-10
members, list of 15-11
shared formats 15-14
saving 5-4
updating save history in members 3-5
with referential constraint
saving 5-5
database relations
displaying 15-16
database service (QSXJRN) journal 3-13
date editing format (QDATFMT) system value
resetting during recovery 11-12
DCDB (domain controller database)
saving 5-13
decimal data editing format (QDECFMT) system value
resetting during recovery 11-12
dedicated service tools (DST)
definition 9-1
Dedicated Service Tools (DST) Sign On display 11-3
default
owner (QDFTOWN) user profile
restoring objects 15-3
default system code character set (QCCSID) system value
resetting during recovery 11-12
default system code page (QCHRID) system value
resetting during recovery 11-12
default workstation keyboard type QKBDTYPE) system value
resetting during recovery 11-12
define or change system at IPL
during recovery 11-10
Define or Change the System at IPL menu 11-11
defining system
at IPL
during recovery 11-11
deleting
journal 15-17
journal receiver 15-18
physical file 15-16
dependent file
restoring 15-14
determining
saved objects 3-9, 3-10
device
recovering after restore operation 15-6
starting
during recovery 11-10

device configuration
restoring 15-5
device description
save methods 3-2
device parity protection
overview 1-3
recovery steps 9-24
different system
restore procedure 9-33
directory
restoring
changed objects 16-8
restoring objects 15-23
save methods 3-4
saving 5-10
changed objects 5-11
directory entry
renaming
restoring mail 15-21
disabling
high-speed feature on 2440 Tape Unit 10-14
disaster recovery
sample plan B-1
disk
failed
removing 13-19
recovering configuration 10-12
disk configuration
damaged 11-5
definition 9-1
recovering 10-12
disk failure
overview 2-1
pump 9-2
recovery with checksum 9-25
recovery with device parity protection 9-24
recovery with mirrored protection 9-23
disk image
saving
considerations 7-1
overview 7-1
disk storage
isolating 1-2
segmenting 1-2
disk unit
nonconfigured status
reasons 11-4
disk unit failure
recovery strategy 9-2
disk usage
DLOs (document library objects) 5-9
Display Access Path Status display 11-13, 12-4
Display Constraint Status display 11-14, 12-5
Display Database Relations (DSPDBR) command 15-16
Display Disk Configuration Capacity display 13-11, 13-12
Display Overflowed Objects (DSPOVFOBJ) command 13-10
displaying
database relations 15-16
load source unit information A-1
distribution object
restoring 15-21
save methods 3-4
saving changed DLOs 5-8
distribution services (QAOSDIAJRN) journal
applying journaled changes 16-6
overview 3-12
distribution tape
restoring Licensed Internal Code 10-2, 10-7
restoring OS/400 licensed program 11-1
DLO (document library object)
freeing storage 3-8
how they are stored 5-7
how they are used 5-7
how to save
general 5-8
office services 5-9
maximum number on RSTDLO command 15-20
maximum number on SAVDLO command 3-9
reclaiming 15-20
reducing disk storage 5-9
renaming
restoring documents 15-22
restoring
descriptive information 15-21
media error 8-8
overview 15-19
renaming document 15-20
user ASP 13-16
using RST (Restore) command 15-25
restoring authority 15-21
restoring ownership 15-21
save methods 3-3
saving
authority required 5-8
updating history 3-10
using QSAVDLOALL data area 3-10
saving changed 5-8
search index files 5-8
document
how they are stored 5-7
how they are used 5-7
restoring
damaged 15-20
overview 15-19
document (QDOC) library
overview 5-8
document library
querying 13-17
document library object (DLO)
freeing storage 3-8

document library object (DLO) *(continued)*
how they are stored 5-7
how they are used 5-7
how to save
general 5-8
office services 5-9
maximum number on RSTDLO command 15-20
maximum number on SAVDLO command 3-9
reclaiming 15-20
reducing disk storage 5-9
renaming
restoring documents 15-22
restoring
descriptive information 15-21
media error 8-8
overview 15-19
renaming document 15-20
user ASP 13-16
using RST (Restore) command 15-25
restoring authority 15-21
restoring ownership 15-21
save methods 3-3
saving
authority required 5-8
updating history 3-10
using QSAVDLOALL data area 3-10
saving changed 5-8
search index files 5-8
document library services (QDLS) file system 5-8
domain controller database (DCDB)
saving 5-13
double-byte coded font name (QIGCCDEFNT) system value
resetting during recovery 11-12
DSNX (QDSNX) journal 3-12
DSPDBR (Display Database Relations) command 15-16
DSPOVFOBJ (Display Overflowed Objects) command 13-10
DST (dedicated service tools)
definition 9-1
dual systems
overview 1-4

E

Edit Check Pending Constraint (EDTCPCST) command 12-5
Edit Check Pending Constraints display 11-14, 12-4
edit description
recovering 15-1
restoring 11-8
save methods 3-2
Edit Rebuild of Access Paths display 11-13, 12-3
EDTCPCST (Edit Check Pending Constraint) command 12-5
enabling
automatic configuration
during recovery 11-11
high-speed feature on 2440 Tape Unit 10-14
End Subsystem (ENDSBS) command
QCALSRV (calendar server) subsystem 8-3
QSYSWRK (subsystem monitor) subsystem 8-3
restricted state 8-3
using 8-3
ending
subsystem
QCALSRV (calendar server) subsystem 8-3
QSYSWRK (subsystem monitor) subsystem 8-3
restricted state 8-3
using 8-3
ENDSBS (End Subsystem) command
QSYSWRK (subsystem monitor) subsystem 8-3
restricted state 8-3
using 8-3
entire system
restore operation
unattended 14-2
restoring 14-1
saving
authority required 4-2, 4-4
delayed start 4-6
specify command defaults 4-5
unattended 4-4
using Save menu 4-2
error
restore operation
not recoverable 8-7
recoverable 8-7
SRM (system resource management) database 15-5
when using tape 3-7
example
database file
multiple members 15-9
hard link 5-11
symbolic link 5-11
EXPDATE (expiration date) parameter 3-7
expiration date (EXPDATE) parameter 3-7

F

failure types 2-1
feature-unique Licensed Internal Code (FULIC)
save methods 3-2
file
See also database file
constraint
editing during IPL 12-4
database
shared formats 15-14
journaled
restoring 15-15

file *(continued)*
restoring
logical 15-12
file member
saving 5-4
file member (FILEMBR) parameter 5-4
file network
saving 5-5
File Server I/O Processor
save methods 3-4
varying 5-14
file system
document library services (QDLS) 5-8
QDLS (document library services) 5-8
QLANSrv (LAN server)
restoring 15-24
save methods 3-4
saving 5-12
QOpenSys
save methods 3-4
Root
save methods 3-4
save procedures 3-1, 5-10
FILEMBR (file member) parameter 5-4
folder
how they are stored 5-7
how they are used 5-7
restoring
damaged 15-20
overview 15-19
procedure 15-20
save methods 3-3
freeing storage
access paths 3-8
database file 3-8
document library object (DLO) 3-8
during save procedure 3-8
journal receivers 3-8
programs 3-8
FULIC (feature-unique Licensed Internal Code)
save methods 3-2
function code 23
preparation 10-1
procedure description 10-1
reasons 10-1
steps 10-2
function code 24
preparation 10-7
procedure description 10-7
reasons 10-7
steps 10-8
system action 10-7

G

general purpose (QGPL) library
save methods 3-3
generic name
definition 5-2
GIGMIG (AS/400DASD Migration) service offering 1-6

H

hard link
example 5-11
restoring 15-23
saving 5-11
help (QHLPSYS) library
save methods 3-2
high availability
definition 2-6
high-speed feature
2440 Tape Unit
disabling 10-14
enabling 10-14
human error
overview 2-2
recovery strategy 9-2

I

IBM (*IBM) special value
list of IBM-supplied libraries 5-1
IBM-supplied journal
managing 3-12
IBM-supplied user profile
damaged 12-6
Image WAF/400
saving 5-8
initial program load (IPL)
after abnormal end 12-1
editing check pending constraints 12-4
editing rebuild of access paths 12-3
options
during recovery 11-10
performing normal 8-9
reducing time 1-2
restoring operating system 11-2
selecting options
restoring operating system 11-9
install options
selecting
restoring operating system 11-6
Install the Operating System display 11-5
installation
abbreviated
definition 11-2
integrated file system
definition 5-10
overview xiii

introduction
availability 1-1
backup options 1-1
recovery options 1-1
save options 1-1
IPL (initial program load)
after abnormal end 12-1
editing check pending constraints 12-4
editing rebuild of access paths 12-3
normal 8-9
options
during recovery 11-10
performing normal 8-9
reducing time 1-2
restoring operating system 11-2
selecting options
restoring operating system 11-9
IPL Options display 11-9, 12-2
IPL or Install the System display 11-3
IPL status message
example display 11-5
isolating
disk units 1-2

J

job description
damaged 12-6
job log
save operations 3-10
wrapping during recovery 8-5
job message queue full (QJOBMSGQFL) system value 8-5
job number
resetting counter
during recovery 11-7
job queue
clearing during recovery 11-7
damaged 12-6
saving 5-2
journal
damaged 12-7
definition 1-1
deleting 15-17
IBM-supplied
managing 3-12
receiver
definition 1-1
recovering from QRCL library 13-5
restoring 15-16
saving 5-2, 5-6
journal entry
definition 1-1
journal management
overview 1-1
journal receiver
damaged 12-8
definition 1-1
deleting 15-18
directory
correcting 15-18
freeing storage 3-8
recovering from QRCL library 13-5
restoring 15-16
saving 5-6
journaled changes
applying
broken receiver chain 16-6
determining whether to 16-3
unbroken receiver chain 16-5
journaled file
damaged 12-8
not synchronized 12-8
saving 5-4
journaled object (OBJJRN) parameter 5-3
journaling
access path
overview 1-2
applying changes 16-3
definition 1-1
overview 1-1
using SAVCHGOBJ (Save Changed Object) command 5-3

L

labeling
tapes 3-6
LAN server (QLANSrv) file system
restoring 15-24
save methods 3-4
saving 5-12
LAN Server/400
domain controller database (DCDB)
saving 5-13
restoring 15-24
saving
aliases 5-13
authority information 5-13
how to 5-12
netnames 5-13
objects with multiple names 5-13
language identifier (QLANGID) system value
resetting during recovery 11-12
language-sensitive system value
resetting during recovery 11-12
leap year adjustment (QLEAPADJ) system value
resetting during recovery 11-12
library
licensed program
save methods 3-3

library *(continued)*
locking during restore procedure 8-6
locking during save procedure 3-8
new
SAVCHGOBJ (Save Changed Objects) command 5-3
QDOC (document)
save methods 3-3
QDOCnnnn (document) 5-8
QGPL (general purpose)
save methods 3-3
QUSRSYS (user system)
QUSRSYS (user system) library
document search index files 5-8
restoring
*ALLUSR libraries 15-8
*IBM libraries 15-8
*NONSYS libraries 15-8
media error 8-7
OPTION parameter 15-8
overview 15-8
user ASP 13-16
saving
*ALLUSR (all-users) special value 5-1
*IBM (IBM) special value 5-1
*NONSYS (non-system) special value 5-1
determining what command was used 17-2
media error 3-11
overview 5-1
SAVFDTA (save file data) parameter 5-6
updating history 3-10
using QSAVDLOALL data area 3-10
using QSAVIBM data area 3-10
using QSAVLIBALL data area 3-10
user
save methods 3-3
library list
changing
during recovery 11-10
library user ASP
definition 9-1
license management
QLZALOG journal 3-12
Licensed Internal Code
definition 9-1
installing using function code 24
SRC (system reference) codes 10-10, 10-11
restoring
preparation 10-1, 10-7
reasons 10-1, 10-7
steps 10-2, 10-8
system action 10-7
using distribution tapes 10-2, 10-7
using function code 23 10-1
using function code 24 10-7
with data loss 10-7
without removing data 10-1
Licensed Internal Code *(continued)*
restoring using function code 23
SRC (system reference) codes 10-4, 10-5
save methods 3-2
SRCs (system reference codes) A-1
system reference codes (SRCs) A-1
licensed programs
restoring 15-19
save methods 3-3
saving 5-7
limitation
save operation size 3-9
link
restoring 15-23
saving 5-11
load source unit
definition 9-1
displaying
configuration A-1
serial number A-1
recovery procedure
complete data loss, no user ASP 9-7
complete data loss, user ASP not overflowed 9-8
no data loss 9-4
some data loss 9-5
locking
database members
during restore 15-10
restore processing 8-6
save processing 3-8
logical file
restoring 15-12
saving 5-2, 5-4, 5-5
lost object 8-4, 12-7

M

mail
restoring 15-21
saving 5-10
mail server framework (QZMF) journal 3-13
major system options
setting
during recovery 11-10
setting during recovery 11-11
managed system services (QCQJMJRN) journal 3-12
managing
IBM-supplied journals 3-12
save tapes 3-6
manual IPL (initial program load)
restoring operating system 11-2
maximum members (MAXMBRS) parameter
exceeding during restore 15-11
MAXMBRS (maximum members) parameter
exceeding during restore 15-11

MBROPT (member option) parameter 15-11
media
choosing 3-5
media error
automatic recovery 3-7
during RSTDLO procedure 8-8
during RSTLIB procedure 8-7
recoverable 3-7
restoring storage 18-6
save operation
recovering 3-11
unrecoverable 3-7
medium save strategy 2-3
member
damaged 12-7
locking
during restore 15-10
renaming
during restore 15-10
restoring
ALWOBJDIF (allow object difference) parameter 15-10
creation date 15-10
saving 5-4
member option (MBROPT) parameter 15-11
MES (Miscellaneous Equipment Specification) upgrade
restore procedure 9-29
message
CPA3388 5-9, 15-22
CPF7088 8-6
CPF8113 12-7
CPI0953 13-10
CPI0954 13-10
message queue
saving 5-2
message reply list
restoring 11-8
microcode
restoring 10-1, 10-7
mirrored protection
overview 1-3
recovery steps 9-23
mirroring
overview 1-3
model-unique Licensed Internal Code (MULIC)
save methods 3-2
moving
user profile
different system 15-3
MULIC (model-unique Licensed Internal Code)
save methods 3-2

N

naming
tapes 3-6
netnames
saving 5-13
network
database
restoring 15-14
network attribute
recovering 15-1
resetting when restoring to a different system 11-12
save methods 3-2
network server storage space
definition 5-12
saving 5-14
network server storage space (QFPNWSSTG) directory
how to save 5-12
save methods 3-4
network storage
definition 5-12
new library
SAVCHGOBJ (Save Changed Objects) command 5-3
non-disk failure
overview 2-2
non-system (*NONSYS) special value
list of IBM-supplied libraries 5-1
nonconfigured disk unit
reasons 11-4
nonlibrary user ASP
definition 9-1
nonload source unit
recovery procedure
complete data loss, no user ASP 9-15
complete data loss, user ASP not overflowed 9-16
complete data loss, user ASP overflowed 9-18
no data loss 9-12
normal initial program load (IPL) 8-9
not synchronized
journaled file 12-8
notices ix

O

object
contents not saved 5-2
damaged 12-8
in directory
saving 5-10
last-changed timestamp 5-3
lost owner 8-4
ownership
restoring 15-3
saving 5-7
primary group
restoring 15-3
saving 5-7
restore sequence 8-3
restoring
RSTOBJ (Restore Object) command 15-9

object *(continued)*
saving
procedure 5-2
SAVFDTA (save file data) parameter 5-6
updating history 3-10
saving changed 5-2
types
how to save C-1
without library 8-4, 12-7
object in directory
restoring 15-23
object ownership
ALWOBJDIF (allow object differences) parameter 15-3
saving 5-7
OBJJRN (journaled object) parameter 5-3
office services
saving 5-9
OfficeVision/400
applying journaled changes 16-6
operating system
damaged object 12-6
preventing unauthorized installation 11-3
restoring
choosing procedure 11-2
manual IPL 11-2
overview 11-1
preparation 11-1
reasons 11-1
selecting install options 11-6
steps 11-3
using distribution tapes 11-1
save methods 3-2
Operational Assistant
backup
lists, folders 6-1
lists, libraries 6-1
options 6-2
overview 6-1
recovering 9-42
schedule 6-3
saving 6-1
saving changed objects 6-3
what to save 6-1
order
restoring objects 8-3
OS/400 licensed program
preventing unauthorized installation 11-3
restoring
choosing procedure 11-2
manual IPL 11-2
overview 11-1
preparation 11-1
reasons 11-1
selecting install options 11-6
steps 11-3
using distribution tapes 11-1
OS/400 licensed program *(continued)*
save methods 3-2
outage
definition 2-5
scheduled
definition 2-5
unscheduled
definition 2-5
output
RSTDLO (Restore Document Library Object) command 15-22
SAV (Save) command 5-14
SAVDLO (Save Document Library Object) command 5-9
output file
saving 5-7
output queue
clearing during recovery 11-7
damaged 12-7
saving 5-2
overflowed object
deleting 13-14
overflowed status
definition 13-10
overflowed user ASP
deleting objects 13-14
determining objects 13-10
determining status 13-11
displaying 13-11, 13-12
recovering 13-10
resetting 13-10, 13-12
overlapping processing
during save operation 3-5
overview
access path protection 1-2
auxiliary storage pool (ASP) 1-2
checksum protection 1-3
device parity protection 1-3
journal management 1-1
mirrored protection 1-3
restore operations 1-1
save operations 1-1
ownership
ALWOBJDIF (allow object differences) parameter 15-3
restoring 15-3

P

parent file
restoring 15-14
pending constraint
editing during IPL 12-4
performance
tape 3-12
performance tuning (QPFRADJ) journal 3-13
physical file
deleting 15-16

physical file *(continued)*
journaled
saving 5-3
saving 5-4
power failure
overview 2-2
recovery strategy 9-2
power loss
battery power unit 1-4
uninterruptible power supply 1-4
workstation 1-4
pre-check (PRECHK) parameter 3-5
PRECHK (pre-check) parameter 3-5
preparing
tape units 3-7
tapes 3-7
primary group
restoring 15-3
saving 5-7
Print Error Log (PRTERRLOG) command
tapes 3-7
print file
See spooled file
Print Save Status (PRTSAVSTS) command 3-11
printer writer
starting
during recovery 11-10
printing
error log 3-7
saved objects 3-9
private authority
restoring 15-4
save methods 3-2
saving 5-7
profile
QDFTOWN (default owner)
restoring objects 15-3
program
freeing storage 3-8
recreation 15-18
restoring 15-18
retranslation 15-18
validation value 15-18
program failure
overview 2-2
recovery strategy 9-2
program temporary fix (PTF)
restoring 15-25
PRTERRLOG (Print Error Log) command
tapes 3-7
PRTSAVSTS (Print Save Status) command 3-11
PTF (program temporary fix)
restoring 15-25
public authority
saving 5-7
pump (disk pump) 9-2

Q

QACGJRN (accounting) journal 3-12
QALWOBJRST (allow object restore operation) system value 8-4
QALWUSRDMN (allow user domain objects) system value 8-4
QAOSDIAJRN (distribution services) journal
applying journaled changes 16-6
overview 3-12
QAPZ files
attempting to restore 8-6
QAUDJRN (audit) journal
creating during restore 8-6
description 3-12
QCALSRV (calendar server) subsystem
ending 8-3
QCCSID (default system code character set) system value
resetting during recovery 11-12
QCHRID (default system code page) system value
resetting during recovery 11-12
QCNTRYID (country identifier) system value
resetting during recovery 11-12
QCQJMJRN (managed system services) journal 3-12
QCURSYM (currency symbol) system value
resetting during recovery 11-12
QDATFMT (date editing format) system value
resetting during recovery 11-12
QDECFMT (decimal data editing format) system value
resetting during recovery 11-12
QDFTOWN (default owner) user profile
assigning ownership during reclaim storage procedure 8-4
restoring objects 15-3
QDLS (document library services) file system 5-8
QDLS file system
definition xiii
QDOC (document) library
overview 5-8
save methods 3-3
QDOCnnnn (document) library
overview 5-8
QDSNX (DSNX) journal 3-12
QFPNWSSTG (network server storage space) directory
how to save 5-12
save methods 3-4
QGPL (general purpose) library
save methods 3-3
QHLPSYS (system help) library
save methods 3-2
QIGCCDEFNT (double-byte coded font name) system value
resetting during recovery 11-12

QJOBMSGQFL (job message queue full) system value 8-5
QKBDTYPE (default workstation keyboard type) system value
resetting during recovery 11-12
QLANGID (language identifier) system value
resetting during recovery 11-12
QLANSrv (LAN server) file system
restoring 15-24
save methods 3-4
saving 5-12
QLANSrv directory 5-12
QLANSrv file system
definition xiii
QLEAPADJ (leap year adjustment) system value
resetting during recovery 11-12
QLYJRN (Application Development Manager transaction log) journal 3-12
QLYPRJLOG (Application Development Manager project log) journal 3-12
QLZALOG (license management) journal 3-12
QOpenSys file system
definition xiii
save methods 3-4
QPFRADJ (performance tuning) journal 3-13
QRCL (recovery) library
duplicate names 8-4
journal 13-5
journal receiver 13-5
using for recovery 13-5
QRYDOCLIB (Query Document Library) command 13-17
QSAVALLUSR data area 3-10
QSAVCFG data area 3-10
QSAVDLOALL data area 3-10
QSAVIBM data area 3-10
QSAVLIBALL data area 3-10
QSAVSTG data area 3-10
QSAVSYS data area 3-10
QSAVUSRPRF data area 3-10
QSNADS (SNADS) journal 3-13
QSNMP (SNMP) journal 3-13
QSXJRN (database service) journal 3-13
QSYS.LIB file system
definition xiii
QSYSWRK (subsystem monitor) subsystem
ending 8-3
QTIMESEP (time separator) system value
resetting during recovery 11-12
Query Document Library (QRYDOCLIB) command 13-17
querying
document library 13-17
QUSRSYS (user system) library
document search index files 5-8
save methods 3-3
QUSRTOOL (user tools) library
save methods 3-2
QZMF (mail server framework) journal 3-13

R

RCLDLO (Reclaim Document Library Object) command 15-20
RCLSTG (Reclaim Storage) command
duplicate names in QRCL 8-4
object ownership 8-4
procedure 8-3, 13-3
QALWUSRDMN (allow user domain objects) system value 8-4
recovering user ASP 13-3
user domain object 8-4
what system does 8-3
why to run 12-7
re-creation
program 15-18
receiver
journal
objects in QRCL library 13-5
restoring 15-16
receiver chain
broken
applying journaled changes 16-6
definition 15-18
unbroken
applying journaled changes 16-5
receiver directory
correcting 15-18
Reclaim Document Library Object (RCLDLO) command 15-20
Reclaim Storage (RCLSTG) command
duplicate names in QRCL 8-4
object ownership 8-4
procedure 8-3, 13-3
QALWUSRDMN (allow user domain objects) system value 8-4
recovering user ASP 13-3
user domain object 8-4
what system does 8-3
why to run 12-7
reclaiming
document library object (DLO) 15-20
storage
duplicate names in QRCL 8-4
procedure 8-3, 13-3
QALWUSRDMN (allow user domain objects) system value 8-4
recovering user ASP 13-3
user domain object 8-4
what the system does 8-3
why to run 12-7
recoverable
media error 3-7

recoverable error
restore operation 8-7
recovering
access path recovery times 11-7, 15-1
addressability
user ASP 13-2
configuration lists 15-1
devices that will not vary on 15-6
disk configuration 10-12
edit descriptions 11-8, 15-1
Licensed Internal Code
preparation 10-1, 10-7
reasons 10-1, 10-7
steps 10-2, 10-8
system action 10-7
using distribution tapes 10-2, 10-7
using function code 23 10-1
using function code 24 10-7
with data loss 10-7
without removing data 10-1
message reply list 11-8
network attributes 15-1
OS/400 licensed program
choosing procedure 11-2
manual IPL 11-2
overview 11-1
preparation 11-1
reasons 11-1
selecting install options 11-6
steps 11-3
using distribution tapes 11-1
overflowed user ASP 13-10, 13-12
reply list entries 15-1
service attributes 11-7
system information 11-7, 15-1
system management objects 11-7
system reply list 11-8
system values 11-7, 15-1
System/36 environment 15-7
tape controller 15-6
text index search files 15-22
text search services 15-22
unsuccessful restore operation 8-7
user ASP
addressability 13-2
after system ASP 13-2
overflowed 13-10, 13-12
stand-alone 13-14
user information
choosing procedure 9-37
using Operational Assistant backup 9-42
using Restore menu option 21 9-40
using Restore menu options 22 and 23 9-41
using changed objects 16-1
using journaling 16-1
using SAVSTG (save storage) media 18-1
recovery
common terminology 9-1
damaged objects 12-6
disaster
sample plan B-1
unreadable sectors 12-6
recovery (QRCL) library
duplicate names 8-4
journal 13-5
journal receiver 13-5
using for recovery 13-5
recovery checklist
checksum protection 9-25
complete site loss 9-27
device parity protection 9-24
different system 9-33
load source unit
complete data loss, no user ASP 9-7
complete data loss, user ASP not overflowed 9-8
complete data loss, user ASP overflowed 9-10
no data loss 9-4
some data loss 9-5
mirrored protection 9-23
non-load source unit
complete data loss, no user ASP 9-15
complete data loss, user ASP not overflowed 9-16
complete data loss, user ASP overflowed 9-18
no data loss 9-12
some data loss 9-13
system ASP
complete data loss, no user ASP 9-15
complete data loss, user ASP not overflowed 9-16
complete data loss, user ASP overflowed 9-18
removing failed unit 9-26
some data loss 9-13
system upgrade 9-29
user ASP
complete data loss, not overflowed 9-21
complete data loss, overflowed 9-22
no data loss 9-12
some data loss 9-20
user information
using commands 9-38
using Restore menu option 21 9-40
using Restore menu options 22 and 23 9-41
recovery from unreadable sectors during disk failure 12-6
recovery procedure
checksum protection 9-25
complete site loss 9-27
device parity protection 9-24
different system 9-33
load source unit
complete data loss, no user ASP 9-7
complete data loss, user ASP not overflowed 9-8
complete data loss, user ASP overflowed 9-10
no data loss 9-4

recovery procedure *(continued)*
load source unit *(continued)*
some data loss 9-5
mirrored protection 9-23
non-load source unit
complete data loss, no user ASP 9-15
complete data loss, user ASP not overflowed 9-16
complete data loss, user ASP overflowed 9-18
no data loss 9-12
some data loss 9-13
system ASP
complete data loss, no user ASP 9-15
complete data loss, user ASP not overflowed 9-16
complete data loss, user ASP overflowed 9-18
removing failed unit 9-26
some data loss 9-13
system upgrade 9-29
user ASP
complete data loss, not overflowed 9-21
complete data loss, overflowed 9-22
no data loss 9-12
some data loss 9-20
user information
using commands 9-38
using Restore menu option 21 9-40
using Restore menu options 22 and 23 9-41
recovery steps
checksum protection 9-25
complete site loss 9-27
device parity protection 9-24
different system 9-33
load source unit
complete data loss, no user ASP 9-7
complete data loss, user ASP not overflowed 9-8
complete data loss, user ASP overflowed 9-10
no data loss 9-4
some data loss 9-5
mirrored protection 9-23
non-load source unit
complete data loss, no user ASP 9-15
complete data loss, user ASP not overflowed 9-16
complete data loss, user ASP overflowed 9-18
no data loss 9-12
some data loss 9-13
system ASP
complete data loss, no user ASP 9-15
complete data loss, user ASP not overflowed 9-16
complete data loss, user ASP overflowed 9-18
removing failed unit 9-26
some data loss 9-13
system upgrade 9-29
user ASP
complete data loss, not overflowed 9-21
complete data loss, overflowed 9-22
no data loss 9-12
some data loss 9-20
recovery steps *(continued)*
user information
using commands 9-38
using Restore menu option 21 9-40
using Restore menu options 22 and 23 9-41
recovery strategy
disk failure 9-2
human error 9-2
power failure 9-2
program failure 9-2
selecting 9-1
system failure 9-2
testing 2-5
referential constraint
pending
editing during IPL 12-4
restoring 15-14
saving files 5-5
release-to-release
restore procedure 9-33
saving user data 5-15
Remove Units from Configuration display 13-23
removing
failed disk unit 13-19
failed unit
system ASP 9-26
Rename Directory Entry (RNMDIRE) command
restoring mail 15-21
Rename Document Library Object (RNMDLO) command
restoring documents 15-22
renaming
database file
during restore 15-10
directory entry
restoring mail 15-21
document library object
restoring documents 15-22
reply list
restoring 11-8
reply list entry
recovering 15-1
resetting
job number counter
during recovery 11-7
overflowed user ASP 13-10, 13-12
resource not detected status
correcting 15-5
Restore (RST) command
changed objects 16-8
how to use 15-23
restrictions 15-24
restrictions when restoring documents 15-25
Restore Authority (RSTAUT) command 15-4
Restore Configuration (RSTCFG) command 15-5
Restore Document Library Object (RSTDLO) command
maximum number of DLOs 15-20

Restore Document Library Object (RSTDLO) command *(continued)*
media error 8-8
output 15-22
overview 15-19
renaming document 15-20
restoring authority 15-21
restoring descriptive information 15-21
restoring ownership 15-21
user ASP 13-16
Restore Library (RSTLIB) command
*ALLUSR libraries 15-8
*IBM libraries 15-8
*NONSYS libraries 15-8
media error 8-7
OPTION parameter 15-8
overview 15-8
user ASP 13-16
Restore Licensed Program (RSTLICPGM) command 15-19
Restore menu
commands run by menu options 14-1
option 21 (entire system) 14-1
option 22 (system data only) 14-1
option 23 (all user data) 14-1
using 14-1
Restore Object (RSTOBJ) command 15-9
restore operation
overview 1-1
restore strategy
disk failure 9-2
human error 9-2
power failure 9-2
program failure 9-2
selecting 9-1
system failure 9-2
testing 2-5
Restore User Profiles (RSTUSRPRF) command 15-1
restoring
*ALLOBJ (all-object) special authority 15-3
access path recovery times 11-7
access paths 15-12
allowing sensitive programs 8-4
ALWOBJDIF (allow object differences) parameter 15-3
authority
document library object 15-21
authority holders 15-3
authorization lists 15-3
changed objects
by library 16-2
by object 16-2
cumulative 16-2
not cumulative 16-2
changing console type 15-7
configuration 15-5
problems with system resource management (SRM) database 15-5
restoring *(continued)*
correct sequence 8-3
damaged document 15-20
database file
ALWOBJDIF (allow object difference) parameter 15-10
creation date 15-10
different member set 15-11
how to 15-9
MAXMBRS (maximum members) parameter 15-11
MBROPT (member option) parameter 15-11
member locking 15-10
renaming 15-10
determining tape contents 17-2
different system
network attributes 11-12
distribution objects 15-21
DLO (document library object)
maximum number 15-20
DLOs (document library objects)
overview 15-19
document library object
descriptive information 15-21
media error 8-8
document library object (DLO)
renaming document 15-20
user ASP 13-16
document library objects (DLOs)
overview 15-19
documents
media error 8-8
overview 15-19
during system upgrade 9-29
edit descriptions 11-8
entire system 14-1
unattended 14-2
error is not recoverable 8-7
error is recoverable 8-7
file with trigger program 15-15
files being journaled 15-15
folders
overview 15-19
procedure 15-20
hard link 15-23
into damaged folder 15-20
journal receivers 15-16
journals 15-16
LAN Server/400 information 15-24
libraries
*ALLUSR libraries 15-8
*IBM libraries 15-8
*NONSYS libraries 15-8
OPTION parameter 15-8
overview 15-8
library
media error 8-7
user ASP 13-16

restoring *(continued)*
Licensed Internal Code
preparation 10-1, 10-7
reasons 10-1, 10-7
steps 10-2, 10-8
system action 10-7
using distribution tapes 10-2, 10-7
using function code 23 10-1
using function code 24 10-7
with data loss 10-7
without removing data 10-1
licensed programs 15-19
link 15-23
list of members 15-11
locking objects 8-6
logical files 15-12
mail 15-21
member
renaming 15-10
message reply list 11-8
object
how to 15-9
multiple names 15-23
objects in directories 15-23
OS/400 licensed program
choosing procedure 11-2
manual IPL 11-2
overview 11-1
preparation 11-1
reasons 11-1
selecting install options 11-6
steps 11-3
using distribution tapes 11-1
ownership
document library object 15-21
parts of system 8-1
program temporary fixes (PTF) 15-25
programs 15-18
PTF (program temporary fixes) 15-25
QAPZ files 8-6
QGPL (general purpose) library
QAPZ files 8-6
QLANSrv (LAN server) file system 15-24
QUSRSYS (user system) library
QAPZ files 8-6
referential constraints 15-14
related objects 8-3
save file data 15-19
security considerations 8-4
security information
object authorities 15-4
object ownership 15-3
ownership 15-3
primary group 15-3
private authorities 15-4
sequence 15-1
user profiles 15-1
restoring *(continued)*
service attributes 11-7
shared formats 15-14
soft link 15-23
storage
resuming 18-6
symbolic link 15-23
system information 11-7
system management objects 11-7
system reply list 11-8
system values 11-7
to different system 9-33
unsuccessful 8-7
user profile
different system 15-3
procedure 15-1
using Restore menu 14-1
verifying success 8-6
restricted state
definition 8-3
starting 8-3
restrictions
save file size 3-9
save operation size 3-9
Resulting Capacity display 13-23
resuming
restore storage 18-6
SAVSTG (Save Storage) command 7-6
retranslation
See re-creation
RNMDIRE (Rename Directory Entry) command
restoring mail 15-21
RNMDLO (Rename Document Library Object) command
restoring documents 15-22
Root file system
definition xiii
save methods 3-4
rotating
tape sets 3-6
RST (Restore) command
changed objects 16-8
how to use 15-23
restrictions 15-24
restrictions when restoring documents 15-25
RSTAUT (Restore Authority) command 15-4
RSTCFG (Restore Configuration) command 15-5
RSTDLO (Restore Document Library Object) command
maximum number of DLOs 15-20
media error 8-8
output 15-22
overview 15-19
renaming document 15-20
restoring authority 15-21
restoring descriptive information 15-21
restoring ownership 15-21
user ASP 13-16

RSTLIB (Restore Library) command
*ALLUSR libraries 15-8
*IBM libraries 15-8
*NONSYS libraries 15-8
media error 8-7
OPTION parameter 15-8
overview 15-8
user ASP 13-16
RSTLICPGM (Restore Licensed Program) command 15-19
RSTOBJ (Restore Object) command 15-9
RSTUSRPRF (Restore User Profiles) command 15-1

S

S/36 environment
recovering 15-7
SAV (Save) command
changed objects 5-11
CHGPERIOD (change period) parameter 5-11
examples 5-13
how to use 5-10
objects that have not changed 5-12
output 5-14
restrictions 5-14, 5-15
using 5-10
SAVCFG (Save Configuration) command
updating history 3-10
using 5-6
using QSAVCFG data area 3-10
SAVCHGOBJ (Save Changed Object) command
examples 5-3
new library 5-3
OBJJRN (journaled object) parameter 5-3
SAVFDTA (save file data) parameter 5-6
updating history 3-10
with journaling 5-3
SAVDLO (Save Document Library Object) command
authority required 5-8
maximum number of DLOs 3-9
output 5-9
saving changed DLOs 5-8
saving mail 5-10
updating history 3-10
using 5-8
using QSAVDLOALL data area 3-10
Save (SAV) command
changed objects 5-11
CHGPERIOD (change period) parameter 5-11
examples 5-13
how to use 5-10
objects that have not changed 5-12
output 5-14
restrictions 5-14, 5-15
using 5-10
Save Changed Object (SAVCHGOBJ) command
examples 5-3
new library 5-3
OBJJRN (journaled object) parameter 5-3
SAVFDTA (save file data) parameter 5-6
updating history 3-10
with journaling 5-3
Save Configuration (SAVCFG) command
updating history 3-10
using 5-6
using QSAVCFG data area 3-10
save directory 3-9
Save Document Library Object (SAVDLO) command
authority required 5-8
maximum number of DLOs 3-9
output 5-9
saving changed DLOs 5-8
saving mail 5-10
updating history 3-10
using 5-8
using QSAVDLOALL data area 3-10
save file
maximum size 3-9
restrictions for use 3-9
saving 5-6
save file data
restoring 15-19
saving 5-6
save history
updating for database members 3-5
Save Library (SAVLIB) command
*ALLUSR (all-users) special value 5-1
*IBM (IBM) special value 5-1
*NONSYS (non-system) special value 5-1
determining what command was used 17-2
media error 3-11
SAVFDTA (save file data) parameter 5-6
updating history 3-10
using 5-1
using QSAVALLUSR data area 3-10
using QSAVIBM data area 3-10
using QSAVLIBALL data area 3-10
Save Licensed Program (SAVLICPGM) command 5-7
save list 3-9
save menu
commands run by menu options 4-1
option 21 (entire system) 4-2
option 22 (system data only) 4-2
option 23 (all user data) 4-2
using 4-1
save method
*SRM (system resource management) object 3-2
access path recovery times 3-2
authorization lists 3-2
configuration objects 3-2
device descriptions 3-2

save method *(continued)*
directories 3-4
distribution objects 3-4
DLOs (document library objects) 3-3
edit descriptions 3-2
File Server I/O Processor 3-4
folders 3-3
FULIC (feature-unique Licensed Internal Code) 3-2
LAN server (QLANSrv) file system 3-4
Licensed Internal Code 3-2
licensed programs 3-3
MULIC (model-unique Licensed Internal Code) 3-2
network attributes 3-2
operating system 3-2
OS/400 licensed program 3-2
private authorities 3-2
QDOC (document) library 3-3
QGPL (general purpose) library 3-3
QHLPSYS (system help) library 3-2
QOpenSys file system 3-4
QUSRSYS (user system) library 3-3
QUSRTOOL (user tools) library 3-2
Root file system 3-4
security information 3-2
serviceability attributes 3-2
system information 3-2
system reply list 3-2
system resource management (*SRM) object 3-2
system values 3-2
user libraries 3-3
user profiles 3-2
Save Object (SAVOBJ) command
SAVFDTA (save file data) parameter 5-6
updating history 3-10
using 5-2
save operation
introduction 1-1
overview 1-1
save procedure
file systems 5-10
Save Save File Data (SAVSAVFDTA) command 5-6
Save Security Data (SAVSECDTA) command
updating history 3-10
using QSAVUSRPRF data area 3-10
Save Storage (SAVSTG) command
considerations 7-1
overview 7-1
resuming 7-6
updating history 3-10
using 7-2
using QSAVSTG data area 3-10
save storage (SAVSTG) media
using in recovery 18-1
save strategy
complex 2-5
disk failure 2-1
save strategy *(continued)*
failure types 2-1
how often to save 2-2
human error 2-2
journaling 2-4
medium 2-3
non-disk failure 2-2
power failure 2-2
program failure 2-2
save-while-active function 2-5
saving changed objects 2-4
saving groups of libraries 2-4
simple 2-3
site loss 2-2
system failure 2-2
system loss 2-2
testing 2-5
what to save 2-2
why needed 2-1
Save System (SAVSYS) command
saving configuration 5-6
using QSAVSYS data area 3-10
save window
definition 2-3
save-while-active function
overview 2-5
saving
access path 5-5
all user data 5-15
changed
document library object 5-8
changed object
examples 5-3
new library 5-3
SAVFDTA (save file data) parameter 5-6
updating history 3-10
with journaling 5-3
changed objects
directories 5-2
only 5-11
Operational Assistant backup 6-3
choosing commands 3-1
choosing media 3-5
choosing menu options 3-1
common methods 3-2
configuration 5-6
procedure 5-6
updating history 3-10
using QSAVCFG data area 3-10
damaged object 3-11
data queues 5-2
database file
what system does 5-4
with referential constraint 5-5
descriptions only 5-2
determining objects 3-9, 3-10

saving *(continued)*
determining tape contents 17-2
disk image
overview 7-1
DLO (document library object)
authority required 5-8
maximum number 3-9
methods 5-8
updating history 3-10
using QSAVDLOALL data area 3-10
document library object (DLO)
authority required 5-8
maximum number 3-9
methods 5-8
updating history 3-10
using QSAVDLOALL data area 3-10
domain controller database (DCDB) 5-13
ensuring that objects are available 3-5
entire system
authority required 4-2, 4-4
delayed start 4-6
media error 3-11
procedure 4-2
specify command defaults 4-5
unattended 4-4
file members 5-4
file network 5-5
file systems 3-1, 5-10
freeing storage 3-8
job log produced 3-10
job queues 5-2
journal receivers 5-6
journaled files 5-4
journals 5-2, 5-6
LAN Server/400
aliases 5-13
authority information 5-13
domain controller database (DCDB) 5-13
information 5-12
netnames 5-13
objects with multiple names 5-13
library
*ALLUSR (all-users) special value 5-1
*IBM (IBM) special value 5-1
*NONSYS (non-system) special value 5-1
description limits 3-9
determining what command was used 17-2
media error 3-11
object limits 3-9
overview 5-1
save directory 3-9
SAVFDTA (save file data) parameter 5-6
updating history 3-10
using QSAVDLOALL data area 3-10
using QSAVIBM data area 3-10
using QSAVLIBALL data area 3-10

saving *(continued)*
link2 5-11
locking objects 3-8
logical files 5-2, 5-4, 5-5
mail 5-10
managing tapes 3-6
media error
recovering 3-11
members 5-4
message queues 5-2
network server storage space 5-14
object
in directories 5-10
multiple names 5-11
procedure 5-2
SAVFDTA (save file data) parameter 5-6
types C-1
unchanged 5-12
updating history 3-10
office services information 5-9
options with Operational Assistant 6-2
output files 5-7
output queues 5-2
parts of system 3-1
physical file
OBJJRN (journaled object) parameter 5-3
with journaling 5-3
physical files 5-4
pre-check 3-5
QLANSrv (LAN server) file system 5-12
save file 5-6
save file data 5-6
save menu 4-1
schedule with Operational Assistant 6-3
security 5-7
security data
updating history 3-10
using QSAVUSRPRF data area 3-10
size limitations 3-9
source files 5-4
spooled files 5-7
spooled output files 5-7
storage
considerations 7-1
overview 7-1
resuming 7-6
updating history 3-10
using 7-2
using QSAVSTG data area 3-10
system
saving configuration 5-6
using QSAVCFG data area 3-10
using QSAVSYS data area 3-10
using QSAVUSRPRF data area 3-10
system process 3-5
text index files 5-10

saving *(continued)*
text search services 5-10
updating history 3-10
user queues 5-2
using Operational Assistant 6-1
using save file 3-9
using save menu 4-1
verifying 3-9
SAVLIB (Save Library) command
*ALLUSR (all-users) special value 5-1
*IBM (IBM) special value 5-1
*NONSYS (non-system) special value 5-1
determining what command was used 17-2
media error 3-11
SAVFDTA (save file data) parameter 5-6
updating history 3-10
using 5-1
using QSAVALLUSR data area 3-10
using QSAVIBM data area 3-10
using QSAVLIBALL data area 3-10
SAVLICPGM (Save Licensed Program) command 5-7
SAVOBJ (Save Object) command
SAVFDTA (save file data) parameter 5-6
updating history 3-10
using 5-2
SAVSAVFDTA (Save Save File Data) command 5-6
SAVSECDTA (Save Security Data) command
updating history 3-10
using QSAVUSRPRF data area 3-10
SAVSTG (Save Storage) command
considerations 7-1
overview 7-1
resuming 7-6
updating history 3-10
using 7-2
using QSAVSTG data area 3-10
SAVSTG (save storage) media
using in recovery 18-1
SAVSYS (Save System) command
saving configuration 5-6
updating history 3-10
using QSAVCFG data area 3-10
using QSAVSYS data area 3-10
using QSAVUSRPRF data area 3-10
SAVSYS (Save System) tape
definition 10-1, 10-7
scheduled outage
definition 2-5
sector damage 9-2
security
saving 5-7
security data
saving
updating history 3-10
using QSAVUSRPRF data area 3-10
security information
components 15-1
restoring 15-1
sequence 15-1
save methods 3-2
sequence
restoring 15-1
security-relevant object
allowing restore operation 8-4
Select ASP to Delete Data From display 13-21
Select Product to Work with PTFs display 11-9, 12-2
selecting
install options
restoring operating system 11-6
sensitive object
allowing restore 8-4
sequence
restoring objects 8-3
server storage
definition 5-12
service attribute
restoring 11-7
serviceability attribute
save methods 3-2
set major system options
during recovery 11-10
Set Major System Options display 11-11
setting
major system options
during recovery 11-11
sideline storage 3-8
simple save strategy 2-3
site loss
recovery procedure 9-27
SMAPP (system-managed access-path protection)
overview 1-2
SNADS (QSNADS) journal 3-13
SNMP (QSNMP) journal 3-13
soft link
restoring 15-23
saving 5-11
source file
saving 5-4
special authority
*ALLOBJ (all-object)
restoring 15-3
Specify Command Defaults display 4-5
Specify Install Options display 11-6
Specify Restore Options display 11-7
spooled file
saving 5-7
SRC (system reference code)
A900 2000
recovery 11-15
installing Licensed Internal Code using 24 10-10
installing Licensed Internal Code using function code 23 A-1

SRC (system reference code) *(continued)*
installing Licensed Internal Code using function code 24 10-11
restoring Licensed Internal Code using 23 10-4
restoring Licensed Internal Code using function code 23 10-5
restoring Licensed Internal Code using function code 24 A-1
SRM (system resource management) database
correcting problems 15-5
SST (system service tools)
definition 9-1
stand-alone function
definition 10-1
Start Update of Index (STRUPDIDX) command 5-10
start-stop tape drive
definition 3-12
starting
device
during recovery 11-10
printer writer
during recovery 11-10
system
after abnormal end 12-1
update of index 5-10
STG (storage) parameter 3-8
STG(*DELETE) value 3-8
STG(*FREE) value 3-8
storage
freeing
access paths 3-8
database file 3-8
document library object (DLO) 3-8
during save procedure 3-8
journal receiver 3-8
programs 3-8
reclaiming
duplicate names in QRCL 8-4
procedure 8-3, 13-3
QALWUSRDMN (allow user domain objects) system value 8-4
recovering user ASP 13-3
user domain object 8-4
what the system does 8-3
why to run 12-7
saving
considerations 7-1
overview 7-1
resuming 7-6
updating history 3-10
using 7-2
using QSAVSTG data area 3-10
storage (STG) parameter 3-8
storing
tapes 3-7
streaming tape drive
definition 3-12
STRUPDIDX (Start Update of Index) command 5-10
subsystem
ending
QCALSRV (calendar server) subsystem 8-3
QSYSWRK (subsystem monitor) subsystem 8-3
restricted state 8-3
using 8-3
subsystem monitor (QSYSWRK) subsystem
ending 8-3
summary of changes xiii
symbolic link
example 5-11
restoring 15-23
saving 5-11
system
common save methods 3-2
parts 3-1, 8-1
saving
saving configuration 5-6
using QSAVCFG data area 3-10
using QSAVSYS data area 3-10
using QSAVUSRPRF data area 3-10
system ASP (auxiliary storage pool)
definition 1-3, 9-1
recovery procedures
complete data loss, no user ASP 9-15
complete data loss, user ASP not overflowed 9-16
complete data loss, user ASP overflowed 9-18
removing failed unit 9-26
some data loss 9-13
removing failed unit 9-26
system data
restoring 14-1
saving 4-2
system failure
overview 2-2
recovery strategy 9-2
types 2-1
system information
recovering 15-1
restoring 11-7
save methods 3-2
system loss 2-2
system management object
restoring 11-7
system reference code (SRC)
A900 2000
recovery 11-15
installing Licensed Internal Code using 24 10-10
installing Licensed Internal Code using function code 24 10-11
restoring Licensed Internal Code using 23 10-4
restoring Licensed Internal Code using function code 23 10-5

system reply list
restoring 11-8
save methods 3-2
system resource management (*SRM) object
save methods 3-2
system resource management (SRM) database
correcting problems 15-5
system service tools (SST)
definition 9-1
system state program
allowing restore operation 8-4
system status display
auxiliary storage
high percentage used 12-7
system upgrade
restore procedure 9-29
system value
allow object restore operation (QALWOBJRST) 8-4
allow user domain objects (QALWUSRDMN) 8-4
changing
during recovery 11-10
job message queue full (QJOBMSGQFL) system value 8-5
language-sensitive
resetting during recovery 11-12
QALWOBJRST (allow object restore operation) 8-4
QALWUSRDMN (allow user domain objects) 8-4
QCCSID (default system code character set)
resetting during recovery 11-12
QCHRID (default system code page)
resetting during recovery 11-12
QCNTRYID (country identifier)
resetting during recovery 11-12
QCURSYM (currency symbol)
resetting during recovery 11-12
QDATFMT (date editing format)
resetting during recovery 11-12
QDECFMT (decimal data editing format)
resetting during recovery 11-12
QIGCCDEFNT (double-byte coded font name)
resetting during recovery 11-12
QJOBMSGQFL (job message queue full) system value 8-5
QKBDTYPE (default workstation keyboard type)
resetting during recovery 11-12
QLANGID (language identifier)
resetting during recovery 11-12
QLEAPADJ (leap year adjustment)
resetting during recovery 11-12
QTIMESEP (time separator)
resetting during recovery 11-12
recovering 15-1
restoring 11-7
save methods 3-2
system-managed access-path protection (SMAPP)
overview 1-2
System/36 environment
during recovery 11-10, 11-11
recovering 15-7

T

tape
CLEAR (clear) parameter 3-7
errors
printing log 3-7
errors that occur 3-7
EXPDATE (expiration date) parameter 3-7
external labels 3-6
managing 3-6
naming conventions 3-6
performance 3-12
preparing 3-7
rotating sets 3-6
save
determining what command was used 17-2
storing 3-7
using correct 3-7
verifying 3-7
VOL (volume) parameter 3-7
tape controller
recovering after restore 15-6
tape drive
start-stop
definition 3-12
steaming
definition 3-12
tape error
save operation
recovering 3-11
tape unit
2440
enabling high-speed feature 10-14
cleaning 3-7
preparing 3-7
terminology
recovery 9-1
testing
recovery strategy 2-5
save strategy 2-5
text index search files
recovering 15-22
saving 5-10
text search services
recovering 15-22
saving 5-10
time separator (QTIMESEP) system value
resetting during recovery 11-12
transferring
user profile
different system 15-3

trigger
restoring 15-15
trigger program
restoring 15-15
type
object
saving C-1

U

unattended restore operation 14-2
unattended save operation 4-4, 4-6
unbroken receiver chain
applying journaled changes 16-5
unchanged object
saving 5-12
unfiled mail
definition 5-8
saving changed DLOs 5-8
uninterruptible power supply
overview 1-4
role in backup and recovery 1-4
unreadable sectors 9-2
recovery 12-6
unrecoverable
media error 3-7
unrecoverable error
restore operation 8-7
unscheduled outage
definition 2-5
unsuccessful
restore operation 8-7
update of index
starting 5-10
updating history
save commands 3-10
UPDHST (update history) parameter 3-10
upgrade
restore procedure 9-29
to different system 5-15, 9-33
UPS
See uninterruptible power supply
user ASP (auxiliary storage pool)
definition 1-3, 9-1
determining overflowed status 13-11
overflowed
deleting objects 13-14
determining objects 13-10
recovering 13-10
resetting 13-10, 13-12
recovering 13-14
recovery procedure
load source unit loss, not overflowed 9-8
load source unit loss, overflowed 9-10
recovery procedures
complete data loss, not overflowed 9-21
complete data loss, overflowed 9-22
user ASP (auxiliary storage pool) *(continued)*
recovery procedures *(continued)*
no data loss 9-12
some data loss 9-20
user data
restoring 14-1
saving 4-2
saving all 5-15
user domain object
reclaiming 8-4
user information
recovering
choosing procedure 9-37
using commands 9-38
using Operational Assistant backup 9-42
user library
save methods 3-3
user profile
*ALLOBJ (all-object) special authority
restoring 15-3
IBM-supplied
damaged 12-6
moving to different system 15-3
restoring 15-1
save methods 3-2
saving 5-7
user queue
saving 5-2
user system (QUSRSYS) library
document search index files 5-8
save methods 3-3
user tools (QUSRTOOL) library
save methods 3-2

V

validation value 15-18
Vary Configuration (VRYCFG) command
File Server I/O Processor 5-14
varying
File Server I/O Processor 5-14
verifying
successful restore 8-6
what is saved 3-9
VOL (volume) parameter 3-7
volume (VOL) parameter 3-7
VRYCFG (Vary Configuration) command
File Server I/O Processor 5-14

W

what to save 6-1

IBM®

TNL SN41-3381-00

Printed in Denmark by Scanprint a·s
Certified Quality System DS/ISO 9002

87G3114

SN41-3381-00